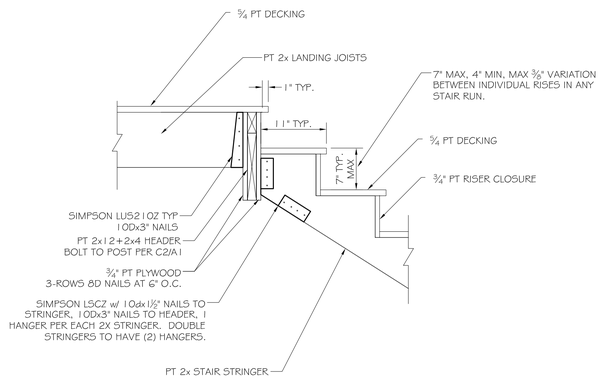

C3 STRINGER ATTACHMENT DETAIL AT LANDING

SCALE: 1"= 1'-0"

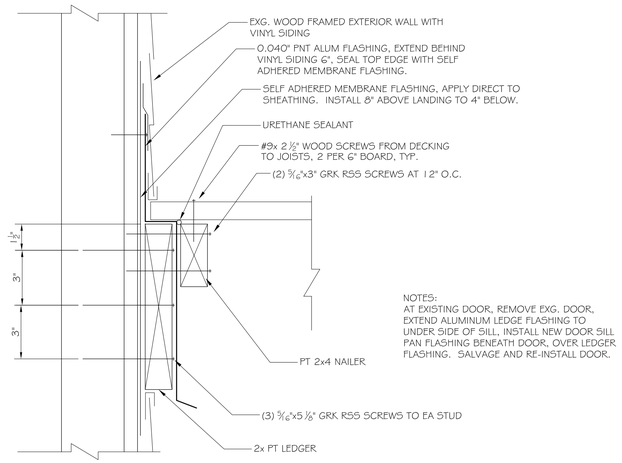

NOTES:
AT EXISTING DOOR, REMOVE EXG. DOOR, EXTEND ALUMINUM LEDGE FLASHING TO UNDER SIDE OF SILL, INSTALL NEW DOOR SILL PAN FLASHING BENEATH DOOR, OVER LEDGER FLASHING. SALVAGE AND RE-INSTALL DOOR.

C2 LEDGER TO WALL CONNECTION DETAIL

SCALE: 3"= 1'-0"

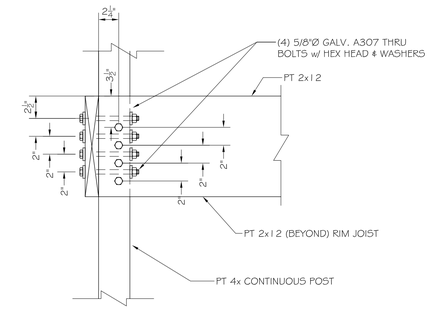

C1 TYPICAL RIM JOIST TO POST ATTACHMENT DETAIL

SCALE: 1½"= 1'-0"

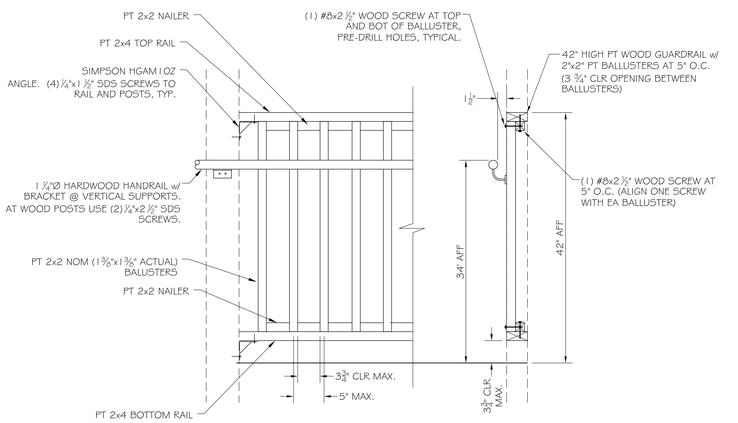

B3 HAND/GUARDRAIL DETAIL

SCALE: 1"= 1'-0"

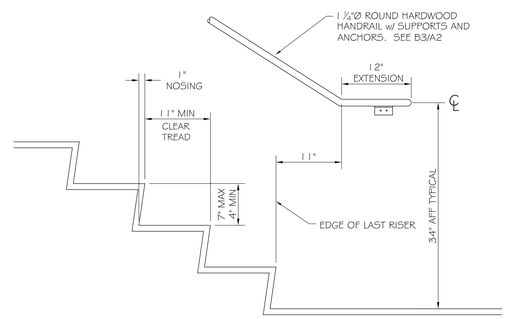

B2 HANDRAIL TERMINATION AT BASE OF STAIRS

SCALE: 1"= 1'-0"

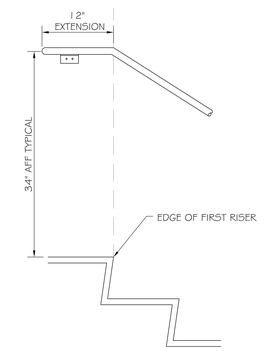

B1 HANDRAIL TERMINATION AT TOP OF STAIRS

SCALE: 1"= 1'-0"

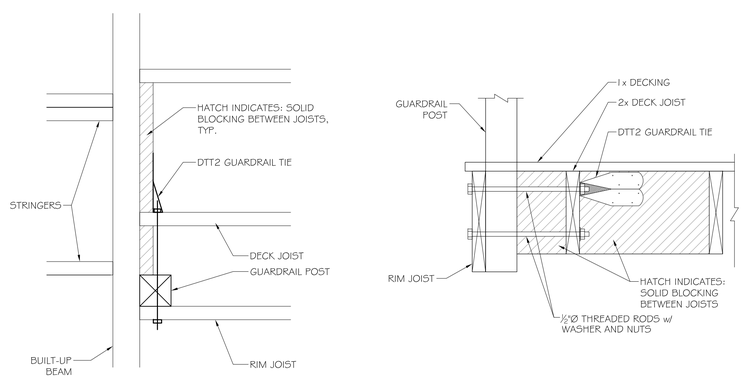

A3 HANDRAIL POST SUPPORT

SCALE: 1½"= 1'-0"

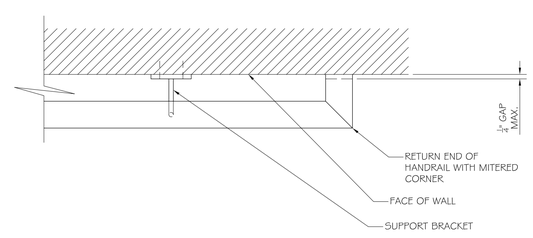

A2 HANDRAIL TERMINATION

SCALE: 3"= 1'-0"

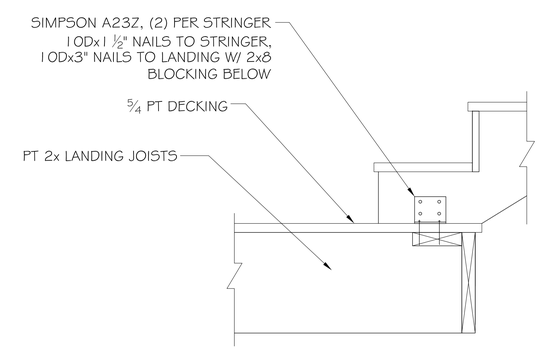

A1 STRINGER CONNECTION AT LANDING

SCALE: 1"= 1'-0"

STATE OF MAINE AARON S. WILSON No. 10429 LICENSED PROFESSIONAL ENGINEER

ASSOCIATED DESIGN PARTNERS INC.
80 Leighton Road
Falmouth, Maine 04105
Office: (207) 878-1751
Fax: (207) 878-1788
E-Mail: adp@adpengineering.com

THIS DRAWING, DESIGN AND ELECTRONIC FILE ARE THE PROPERTY OF ASSOCIATED DESIGN PARTNERS, INC. THE REPRODUCTION, COPYING OR ANY OTHER USE OF THIS DOCUMENT WITHOUT WRITTEN CONSENT IS PROHIBITED.

PROJECT: 34-36 ALDER ST.
PORTLAND, MAINE

FOR:

SHEET TITLE: STAIR DETAILS
ISSUED FOR PERMITTING

REVISIONS

No.	BY	DESCRIPTION	DATE
A			
B			
C			
D			
E			
F			
G			
H			

DATE : 8-22-16
SCALE : AS NOTED
DESIGN BY: ASW
DRAWN BY: RSC
FILE #: 16240-A1.dwg
PROJECT NUMBER: 16240
SHEET NO: A2