Reviewed for Code Compliance
Inspections Division
Approved with Conditions

Date: 01/06/14

FIRE ALARM SCHEMATIC GENERAL NOTES:

A. PROVIDE DUCT MOUNTED SMOKE DETECTORS IN DUCTWORK AS SHOWN ON MECH PLANS PER SPECIFICATIONS.

B. FIRE ALARM CONTRACTOR SHALL BE CURRENTLY LICENSED WITH THE STATE AND SUBMIT A COMPLETE FIRE ALARM SUBMITTAL (PLANS, SPECS., CUT SHEETS ETC.) PREPARED BY THE STATE REGISTERED FIRE PROTECTION CONTRACTOR, AND SUBMITTED TO AUTHORITY HAVING JURISDICTION FOR APPROVAL. INFORMATION SHALL NOT BE LIMITED TO THE FOLLOWING.

- SEQUENCE OF OPERATION
- CATALOG CUT SHEETS.
- POINT TO POINT DIAGRAM.
- HORN,STROBE LIGHTS, MANUAL PULL STATION LAYOUT.
- CANDELA OF STROBES.
- BATTERY CALCULATIONS INCLUDING TOTAL STANDBY AND ALARM CURRENT.

C. CONTRACTOR SHALL PROVIDE ADDITIONAL FIRE ALARM DEVICES PER AHJ AND INCLUDE ALL EXPENSES IN BID TO COMPLETE AN OPERABLE FIRE ALARM SYSTEM AS REQUIRED BY AUTHORITY HAVING JURISDICTION. REFER TO SPECIFICATIONS FOR ADDITIONAL INFORMATION.

D. PROVIDE THE NUMBER OF ACTIVE AND SPARES ADDRESSES AS REQUIRED TO THE FIRE ALARM PANEL TO ACCOMMODATE ALL DEVICES

E. PROVIDE DEDICATED TELEPHONE LINE FOR 24-HOUR MONITORING SYSTEM PER CITY REQUIREMENT.

F. CONTRACTOR SHALL FURNISH/INSTALL FIRE ALARM DEVICES, SYSTEM COMPONENTS, WIRING/CONDUITS AND CONTROLS AS REQUIRED AND COMPLETE THE FIRE ALARM SYSTEM PER NFPA 72 AND AUTHORITY HAVING JURISDICTION "AHJ". FIRE ALARM DEVICES SHALL BE MONITORED FROM AN APPROVED CENTRAL STATION PER AHJ.

G. PROVIDE ALL APPURTENANCES AS REQUIRED TO INTERFACE WITH KITCHEN SMOKE SUPPRESSION SYSTEM.

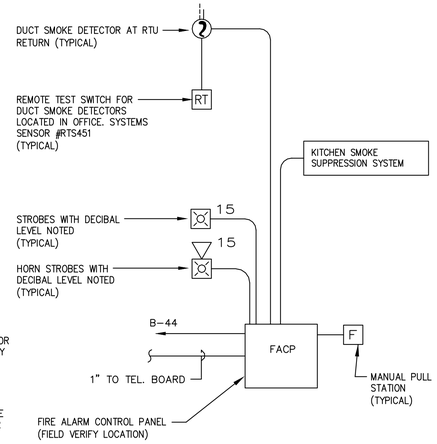

FIRE ALARM RISER DIAGRAM
NOT TO SCALE | 1

TELEPHONE SYSTEM RISER DIAGRAM

1. VERIFY, COORDINATE AND INCORPORATE THE REQUIREMENTS OF THE TELE. CO. AND ALL GOVERNING CODES IN FORCE, PRIOR TO COMMENCEMENT OF WORK.
2. FURNISH AND INSTALL A RACEWAY SYSTEM OF CABLE AND 3/4" CONDUIT AND PROPERLY SIZED JUNCTION BOXES WITH COVERPLATES FOR THE TELEPHONE SYSTEM AS SHOWN ON THE DRAWINGS AND IN THE DIAGRAM.
3. ALL CONDUIT SHALL ORIGINATE AT THE JUNCTION BOXES, BE NO SMALLER THAN 3/4" ELECTRICAL TRADE SIZE, BE CONTINUOUS AND TERMINATE AT THE SYSTEM TERMINAL BOARD NEATLY CLAMPED AND WITH BUSHED ENDS. HOME RUNS SHALL BE LIMITED TO ONE (1) TELEPHONE OUTLET IN ONE 3/4" CONDUIT.
4. THERE ARE MULTIPLE DEDICATED TELEPHONE LINES AND THEY SHALL BE SEGREGATED FROM EACH OTHER AND SHALL BE SEGREGATED FROM THE STANDARD TELEPHONE LINES.
5. FURNISH AND INSTALL A 200 LB TEST NYLON PULL LINE IN ANY EMPTY CONDUIT. TAG EACH END OF PULL LINE AS TO SERVICE AND THE LOCATION OF THE OPPOSITE TERMINUS OF THE CONDUIT.
6. ALL CONDUITS SHALL CONTAIN ONE (1) HIGH QUALITY 4 PAIR CAT III PLENUM CABLE. TELEPHONE LINES PULLED WITH PROPER INSTALLED JACKS. LINES MUST BE LABELED AT TELEPHONE BOARD.

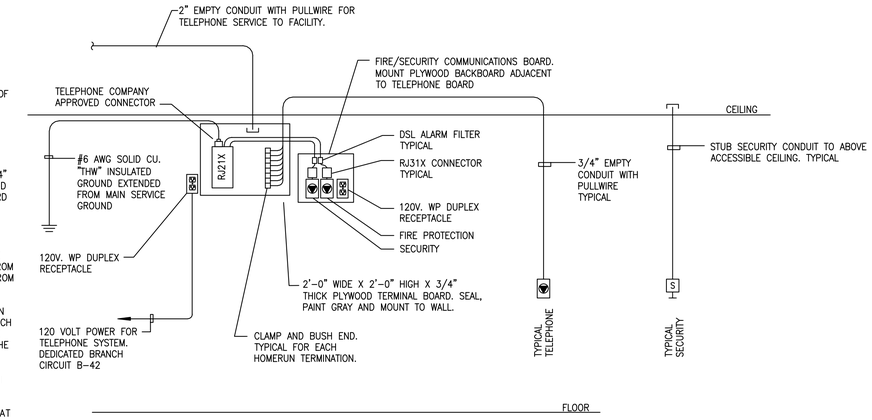

TELEPHONE SYSTEM RISER DIAGRAM
NOT TO SCALE | 2

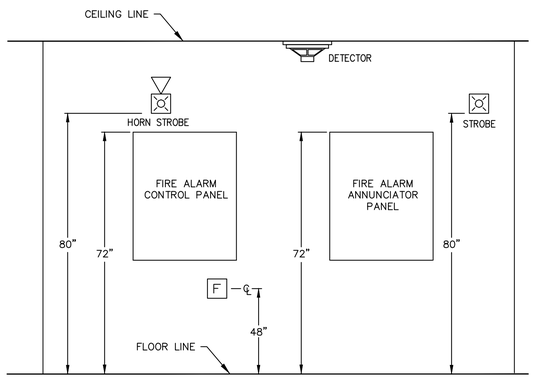

NOTE: HORN STROBE AND STROBE TO BE 80" TO BOTTOM OF LENSE. VERIFY MOUNTING HEIGHTS IN FIELD WITH AVAILABLE CEILING CLEARANCES

TYPICAL FIRE ALARM ELEVATION DETAIL
NOT TO SCALE | 3

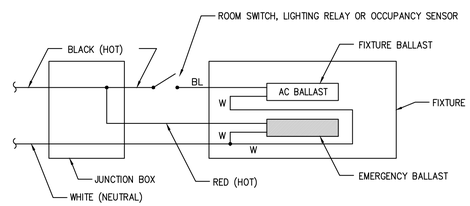

EMERGENCY LIGHTING WIRING DIAGRAM
NOT TO SCALE | 4

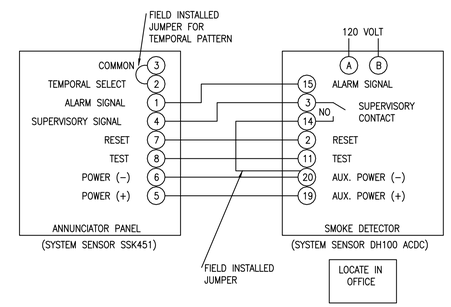

SMOKE DETECTOR WIRING DIAGRAM
NOT TO SCALE | 5

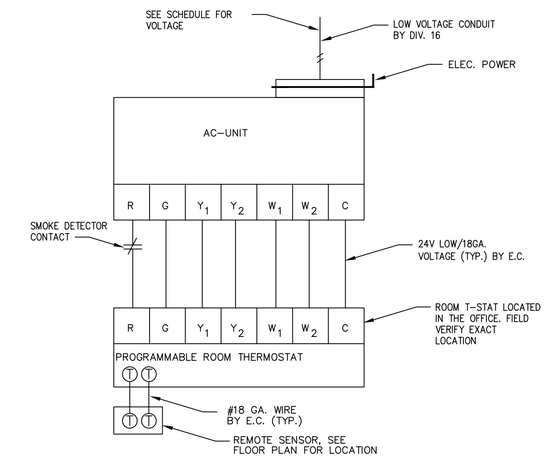

THERMOSTAT WIRING DIAGRAM
NOT TO SCALE | 6

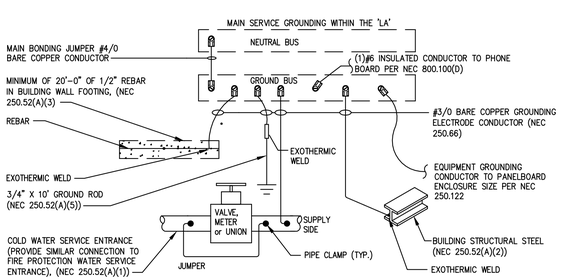

NOTES:

1. ALL GROUNDING SHALL BE INSTALLED IN ACCORDANCE WITH ARTICLE 250 OF THE NATIONAL ELECTRICAL CODE.
2. ALL GROUNDING ELECTRODE CONDUCTORS SHALL BE COPPER #3/0 UNLESS NOTED OTHERWISE.
3. REFER TO ELECTRICAL SPECIFICATIONS FOR ADDITIONAL GROUNDING REQUIREMENTS.

GROUNDING OF MAIN SERVICE ENTRANCE
NOT TO SCALE | 7

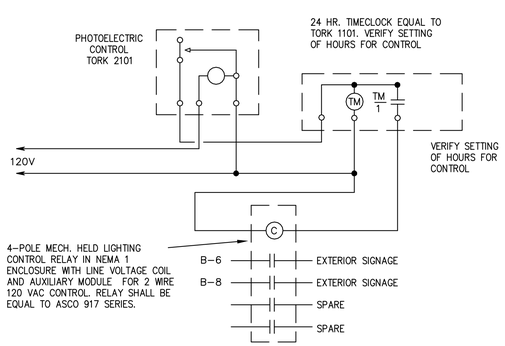

NOTE:
EXTERIOR LIGHTING CONTROLS SHALL BE PHOTOCELL ON/TIMECLOCK OFF CONTROL.

EXTERIOR LIGHTING CONTROL DIAGRAM
NOT TO SCALE | 8

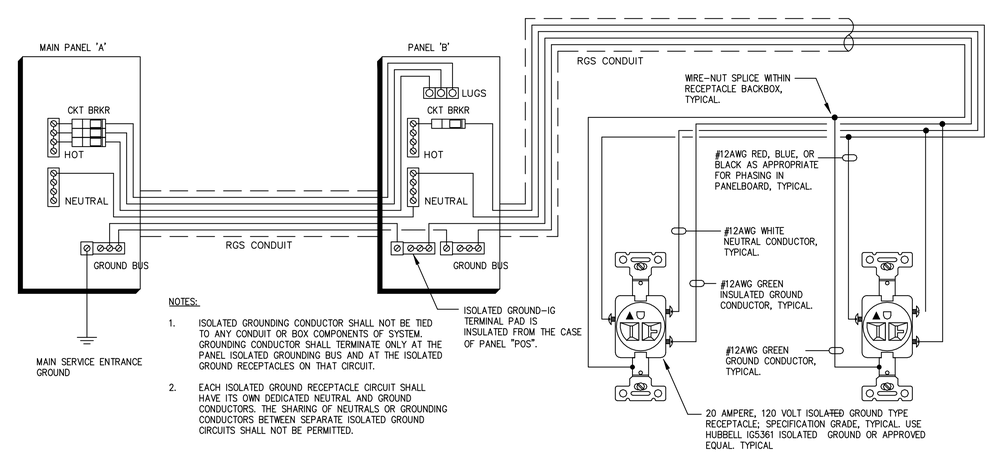

NOTES:

1. ISOLATED GROUNDING CONDUCTOR SHALL NOT BE TIED TO ANY CONDUIT OR BOX COMPONENTS OF SYSTEM. GROUNDING CONDUCTOR SHALL TERMINATE ONLY AT THE PANEL ISOLATED GROUNDING BUS AND AT THE ISOLATED GROUND RECEPTACLES ON THAT CIRCUIT.
2. EACH ISOLATED GROUND RECEPTACLE CIRCUIT SHALL HAVE ITS OWN DEDICATED NEUTRAL AND GROUND CONDUCTORS. THE SHARING OF NEUTRALS OR GROUNDING CONDUCTORS BETWEEN SEPARATE ISOLATED GROUND CIRCUITS SHALL NOT BE PERMITTED.

DEDICATED ISOLATED GROUND SCHEMATIC
NOT TO SCALE | 9

ENGINEER:
BRIAN EDWARD CHANDLER, PE
1431 GREENWAY DRIVE
SUITE 510
IRVING, TX 75038
PHONE 972.870.1288
E-MAIL bchandler@idstudio4.com

CLIENT:
ELEVATION FRANCHISE VENTURES
4100 NORTH FAIRFAX DR. STE 730
ARLINGTON, VA 22203
703.243.7894
www.elevationburger.com

STATE OF MAINE
BRIAN E. CHANDLER
No. 12879
LICENSED PROFESSIONAL ENGINEER

11/18/2013

ELEVATION BURGER

205 COMMERCIAL ST.
PORTLAND, ME 04101

CLIENT: BETTER BURGER OLD PORT, LLC
ONE LONG WHARF
PORTLAND, ME 04101

DATE	DESCRIPTION
11/18/13	PERMIT ISSUE

DATE	DESCRIPTION

SHEET TITLE:
ELECTRICAL DETAILS

SHEET NUMBER:
E2.1

PROJECT NUMBER:
EVB130001