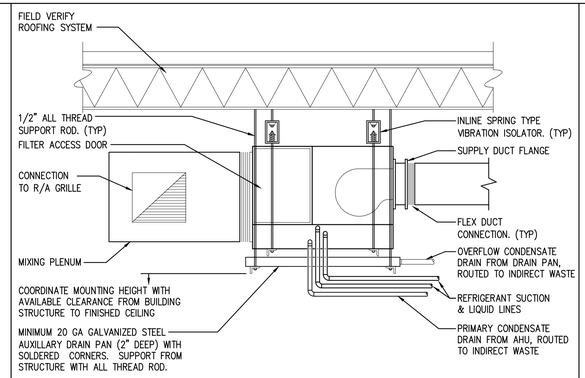

SUSPENDED AIR HANDLING UNIT DETAIL 2
SCALE: NONE

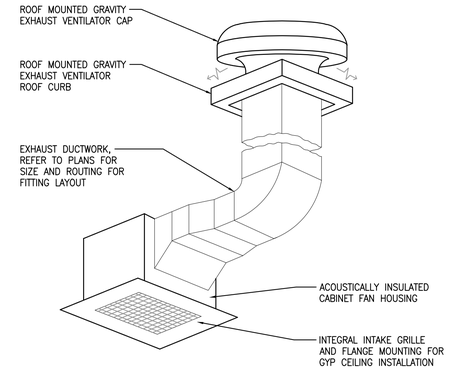

CEILING MOUNTED CABINET FAN DETAIL 3
SCALE: NONE

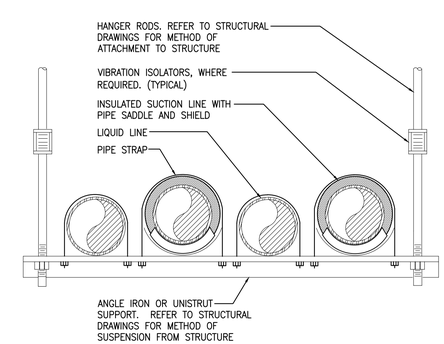

HORIZONTAL REFRIGERANT PIPE SUPPORT DETAIL 4
SCALE: NONE

NOT USED 1
SCALE: NONE

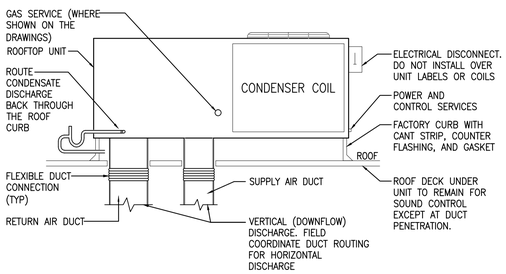

ROOFTOP UNIT DETAIL 5
SCALE: NONE

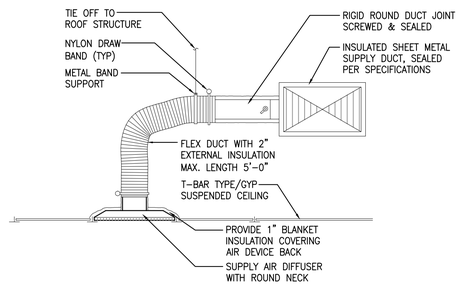

CEILING MOUNTED SUPPLY AIR DIFFUSER DETAIL 6
SCALE: NONE

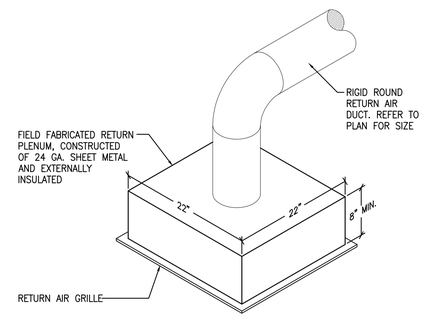

CEILING MNTD. RETURN AIR GRILLE DETAIL 7
SCALE: NONE

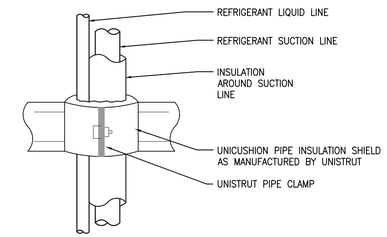

NOTES:
1. LIQUID AND SUCTION LINES MAY BE ROUTED TOGETHER FOR CONVENIENCE, BUT MUST BE COMPLETELY INSULATED FROM EACH OTHER. DO NOT SOLDER LIQUID AND SUCTION LINES TOGETHER. DO NOT ALLOW METAL TO METAL CONTACT.
2. LINES SHOULD BE INSTALLED WITH AS FEW BENDS AS POSSIBLE, ALLOWING SERVICE ACCESS TO THE INDOOR COIL.
3. USE LONG RADIUS ELBOWS WHEREVER POSSIBLE, EXCEPT IN OIL RETURN TRAPS, WHERE SHORT RADIUS ELBOWS SHOULD BE USED.
4. REFER TO MANUFACTURER'S GUIDELINES FOR THE COMPLETE INSTALLATION.

VERTICAL REFRIGERANT PIPE SUPPORT DETAIL 8
SCALE: NONE

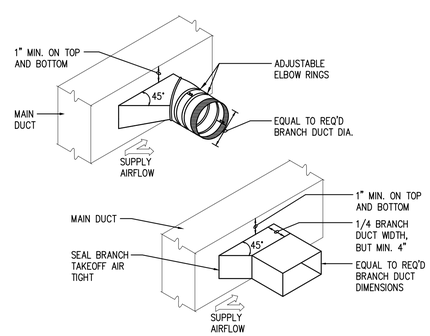

BRANCH TAKE-OFF FITTING DETAIL 9
SCALE: NONE

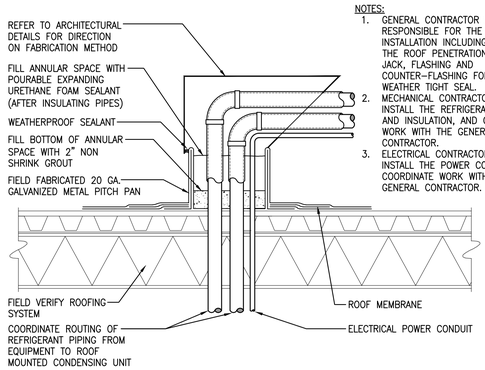

NOTES:
1. GENERAL CONTRACTOR SHALL BE RESPONSIBLE FOR THE COMPLETE INSTALLATION INCLUDING PROVIDING THE ROOF PENETRATION, ROOF JACK, FLASHING AND COUNTER-FLASHING FOR A WEATHER TIGHT SEAL.
2. MECHANICAL CONTRACTOR SHALL INSTALL THE REFRIGERANT PIPING AND INSULATION, AND COORDINATE WORK WITH THE GENERAL CONTRACTOR.
3. ELECTRICAL CONTRACTOR SHALL INSTALL THE POWER CONDUIT, AND COORDINATE WORK WITH THE GENERAL CONTRACTOR.

PIPING AND CONDUIT ROOF PENETRATION DETAIL 10
SCALE: NONE

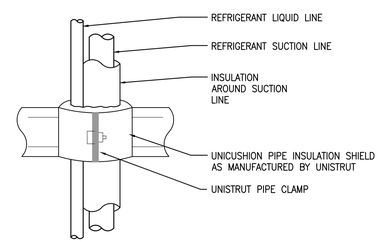

NOTES:
1. LIQUID AND SUCTION LINES MAY BE ROUTED TOGETHER FOR CONVENIENCE, BUT MUST BE COMPLETELY INSULATED FROM EACH OTHER. DO NOT SOLDER LIQUID AND SUCTION LINES TOGETHER. DO NOT ALLOW METAL TO METAL CONTACT.
2. LINES SHOULD BE INSTALLED WITH AS FEW BENDS AS POSSIBLE, ALLOWING SERVICE ACCESS TO THE INDOOR COIL.
3. USE LONG RADIUS ELBOWS WHEREVER POSSIBLE, EXCEPT IN OIL RETURN TRAPS, WHERE SHORT RADIUS ELBOWS SHOULD BE USED.
4. REFER TO MANUFACTURER'S GUIDELINES FOR THE COMPLETE INSTALLATION.

VERTICAL REFRIGERANT PIPE SUPPORT DETAIL 11
SCALE: NONE

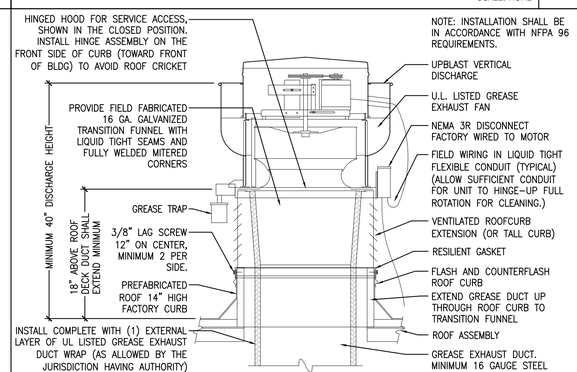

KITCHEN UPBLAST GREASE EXHAUST FAN DETAIL 12
SCALE: NONE

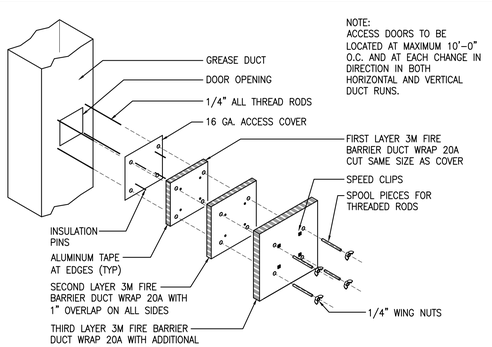

UL LISTED GREASE EXHAUST DUCT ACCESS DOOR DETAIL 13
SCALE: NONE

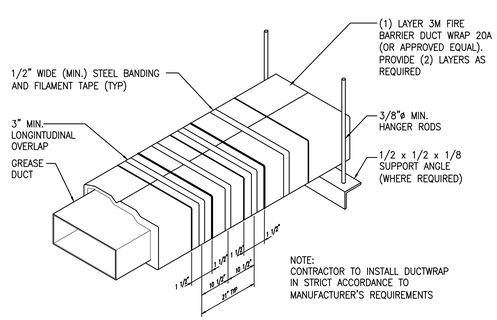

UL LISTED GREASE EXHAUST DUCT WRAP DETAIL 14
SCALE: NONE

NOT USED 15
SCALE: NONE

NOT USED 16
SCALE: NONE

ENGINEER:
BRIAN EDWARD CHANDLER, PE
1431 GREENWAY DRIVE
SUITE 510
IRVING, TX 75038
PHONE 972.870.1288
E-MAIL bchandler@idstudio4.com

CLIENT:
ELEVATION FRANCHISE VENTURES
4100 NORTH FAIRFAX DR. STE 730
ARLINGTON, VA 22203
703.243.7894
www.elevationburger.com

STATE OF MAINE
BRIAN E. CHANDLER
No. 12019
LICENSED
PROFESSIONAL ENGINEER

11/18/2013

ELEVATION BURGER

205 COMMERCIAL ST.
PORTLAND, ME 04101

CLIENT: BETTER BURGER OLD PORT, LLC
ONE LONG WHARF
PORTLAND, ME 04101

DATE	DESCRIPTION
11/18/13	PERMIT ISSUE

DATE	DESCRIPTION

SHEET TITLE:
MECHANICAL DETAILS

SHEET NUMBER:
M3.0

PROJECT NUMBER:
EVB130001