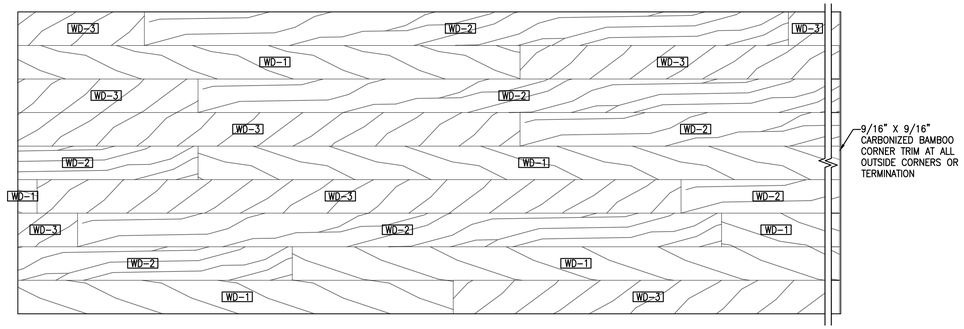

BAMBOO LAYOUT DETAIL N.T.S. 1

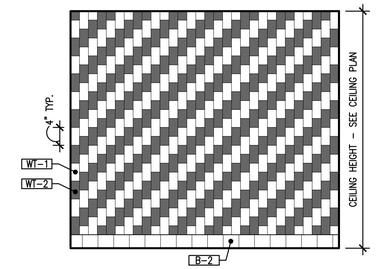

WALL TILE PATTERN AT SERVICE N.T.S. 2

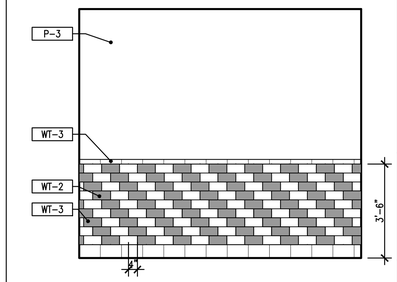

WALL TILE PATTERN AT RESTROOMS N.T.S. 3

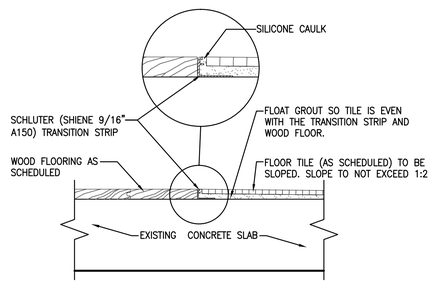

TRANSITION DETAIL N.T.S. 4

NOT USED N.T.S. 5

NOT USED N.T.S. 6

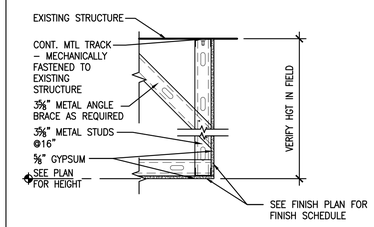

SOFFIT DETAIL N.T.S. 7

NOT USED N.T.S. 8

NOT USED N.T.S. 9

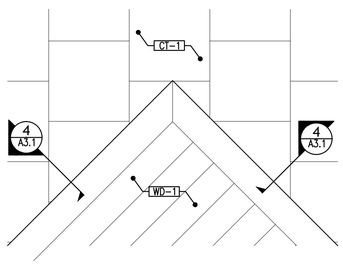

TYP. WOOD BORDER DETAIL N.T.S. 10

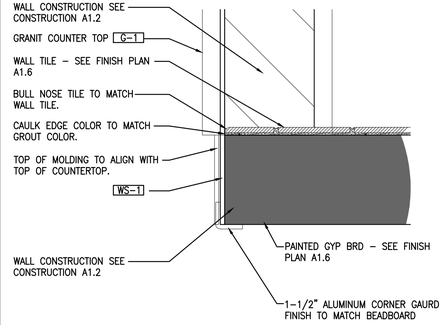

CORNER TERMINATION DETAIL N.T.S. 11

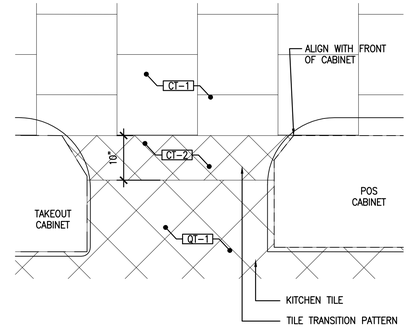

TYP. TILE TRANSITION PATTERN N.T.S. 12

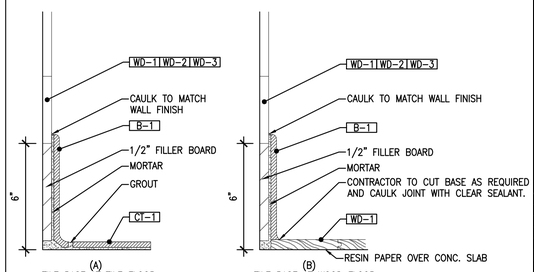

BASE DETAILS AT QUEUE WALLS N.T.S. 13

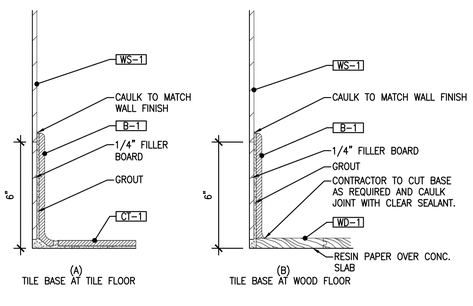

BASE DETAILS AT DINING AREA N.T.S. 14

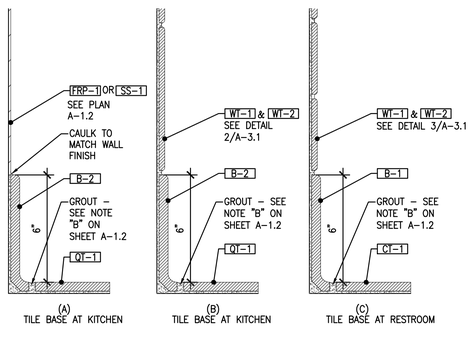

BASE DETAILS AT KITCHEN & RESTROOMS N.T.S. 15

NOT USED N.T.S. 16

ARCHITECT:
THOMAS A. EDSON, RA
1431 GREENWAY DRIVE
SUITE 510
IRVING, TX 75038
PHONE 972.870.1288

CLIENT:
ELEVATION FRANCHISE VENTURES
4100 NORTH FAIRFAX DR. STE 730
ARLINGTON, VA 22203
703.243.7894
www.elevationburger.com

LICENSED ARCHITECT THOMAS A. EDSON No. 2206 STATE OF MAINE

11/18/2013

ELEVATION BURGER

205 COMMERCIAL ST.
PORTLAND, ME 04101

CLIENT: BETTER BURGER OLD PORT, LLC
ONE LONG WHARF
PORTLAND, ME 04101

DATE	DESCRIPTION
11/18/13	PERMIT ISSUE

△	DATE	DESCRIPTION

SHEET TITLE:
DETAILS

SHEET NUMBER:
A3.1

PROJECT NUMBER:
EVB130001

Z:\Elevation Burger\EVB13001 - Portland, ME\3_Construction Documents\3.2_Drawings\3.23_Architectural\A3-1 Details.dwg -- ID Studio 4, LLC -- Tania Inigo -- Monday, November 18, 2013 5:21:55 PM