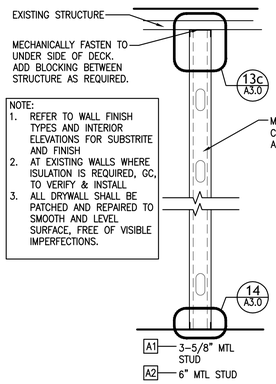

TYPE 'A' FULL HEIGHT WALL

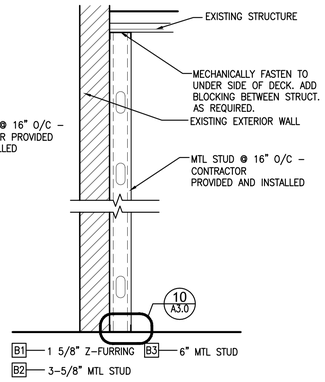

TYPE 'B' FURRED WALL

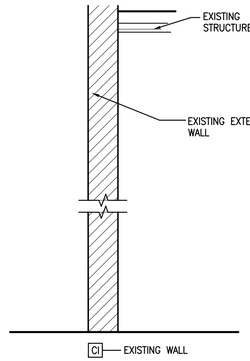

TYPE 'C' – EXISTING

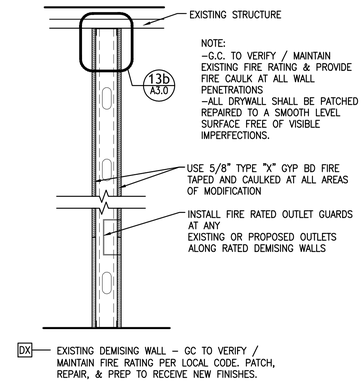

TYPE 'D' EXISTING DEMISING WALL

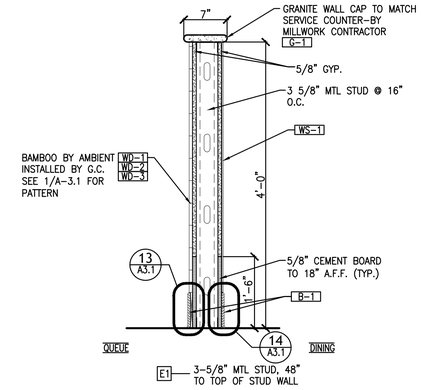

TYPE 'E' LOW WALL

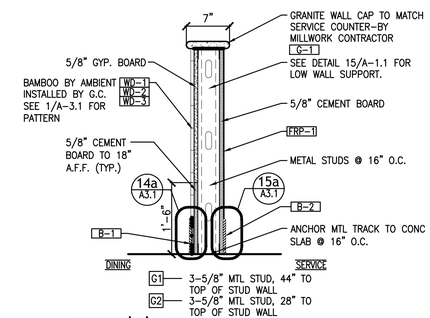

TYPE 'G' LOW WALL

WALL TYPES 1" = 1'-0" | 1

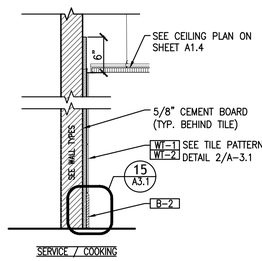

WALL FINISH DETAIL 1" = 1'-0" | 2

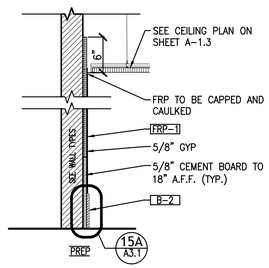

WALL FINISH DETAIL 1" = 1'-0" | 3

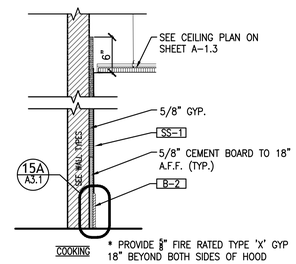

WALL FINISH DETAIL 1" = 1'-0" | 4

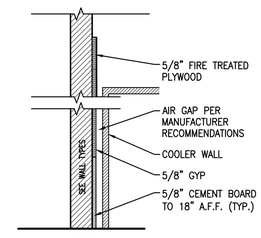

WALL FINISH DETAIL 1" = 1'-0" | 5

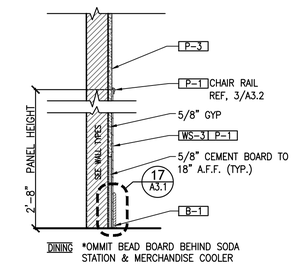

WALL FINISH DETAIL 1" = 1'-0" | 6

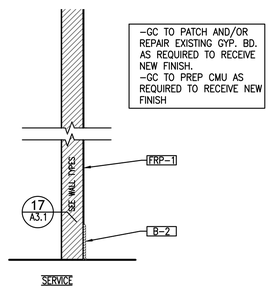

WALL FINISH DETAIL 1" = 1'-0" | 7

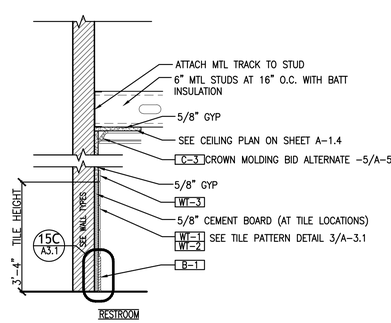

WALL FINISH DETAIL 1" = 1'-0" | 8

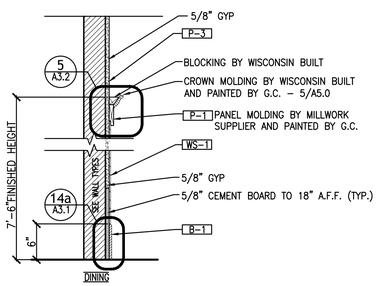

WALL FINISH DETAIL 1" = 1'-0" | 9

NON-LOAD BEARING STUD TYPES

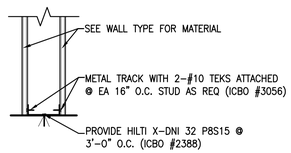

FLOOR CONNECTION DETAIL 1" = 1'-0" | 10

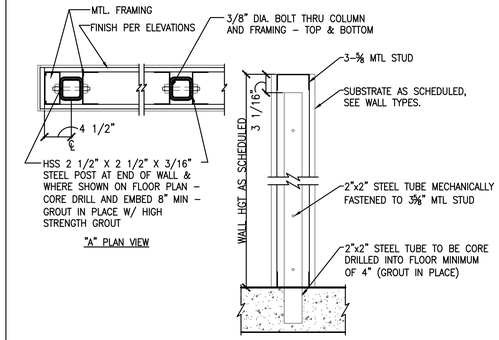

TYP. LOW WALL SUPPORT DETAIL 1" = 1'-0" | 11

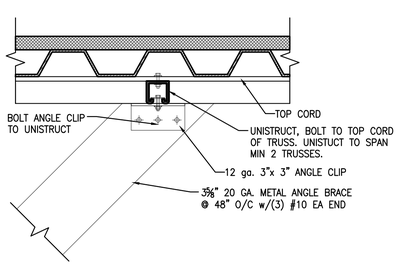

SOFFIT BRACE DETAIL 1" = 1'-0" | 12

SIZE	SPACING	ALLOWABLE HEIGHT	BOTTOM TRACK GAUGE	TOP – "SLIP" TRACK TRACK GAGE (3" DEEP TRACK)
3 ⅝" – 25G STN	16"	15.4'	20	18
3 ⅝" – 20G STR	16"	17.0'	20	18
3 ⅝" – 18 G HDS	16"	22.6'	20	18
6" – 20G STR	16"	24.5'	20	18
6" – 18G HDS	16"	33.6'	20	18

NOTES:

BUILDING CODE REQUIRES THAT INTERIOR PARTITION WALLS BE DESIGNED FOR A LATERAL LOAD OF 5 PSI. THE FOLLOWING GUIDELINES ARE BASED ON THIS LOAD. ALL STUDS GIVEN ARE ASSUMED TO BE EQUIVALENT TO THOSE MANUFACTURED BY DIETRICH INDUSTRIES, INC. ALL STUDS AND TRACKS ARE ASSUMED TO HAVE AN Fy = 33.0 KSI. ALL STUDS ARE ASSUMED TO HAVE ⅝" GYP BD ON BOTH FACES FOR THE FULL HEIGHT OR ARE PROVIDED WITH BRIDGING AS REQUIRED. DETAILS ARE PROVIDED TO ACCOMMODATE VERTICAL MOVEMENT AT THE TOP USING A 3" DEEP TRACK CONNECTION OR NO MOVEMENT. MAXIMUM HORIZONTAL DEFLECTION IS ASSUMED TO BE LIMITED TO H/240. PROVIDE LATERAL BRACING PER SCHEDULE.

1. BOTTOM TRACK GAGES MAY BE SUBSTITUTED FOR TOP–SLIP TRACK GAGES IF STUDS ARE PERMANENTLY ATTACHED TO BOTH FLANGES OF THE TRACK WITH #10 SCREWS.

2. ATTACH BOTTOM TRACK TO SLAB WITH MINIMUM OF 1–POWER DRIVEN FASTENER AT 36" O.C. (MIN SHANK DIAMETER = 0.177 IN MIN EMBEDMENT = 1 1/8 IN).

3. IF GYP BD IS ON ONE SIDE ONLY, ADD HORIZONTAL BRIDGING AT 5'–0" O.C. VERTICALLY.

4. IF YOU HAVE A CASE THAT DIFFERS FROM THE ABOVE, PLEASE CONTACT THE ARCHITECT.

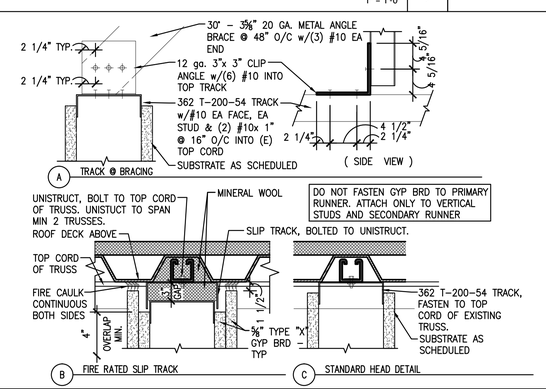

HEAD TRACK DETAIL 1" = 1'-0" | 13

ARCHITECT:
THOMAS A. EDSON, RA
1431 GREENWAY DRIVE
SUITE 510
IRVING, TX 75038
PHONE 972.870.1288

CLIENT:
ELEVATION FRANCHISE VENTURES
4100 NORTH FAIRFAX DR. STE 730
ARLINGTON, VA 22203
703.243.7894
www.elevationburger.com

LICENSED ARCHITECT THOMAS A. EDSON 4672 STATE OF MAINE

11/18/2013

ELEVATION BURGER

205 COMMERCIAL ST.
PORTLAND, ME 04101

CLIENT: BETTER BURGER OLD PORT, LLC
ONE LONG WHARF
PORTLAND, ME 04101

DATE	DESCRIPTION
11/18/13	PERMIT ISSUE

DATE	DESCRIPTION

SHEET TITLE:
DETAILS

SHEET NUMBER:
A3.0

PROJECT NUMBER:
EVB130001

Z:\Elevation Burger\EVB13001 – Portland , ME\3_Construction Documents\3.2_Drawings\3.23_Architectural\A3-0 Details.dwg – ID Studio 4, LLC – Tania Inigo – Monday, November 18, 2013 5:18:23 PM