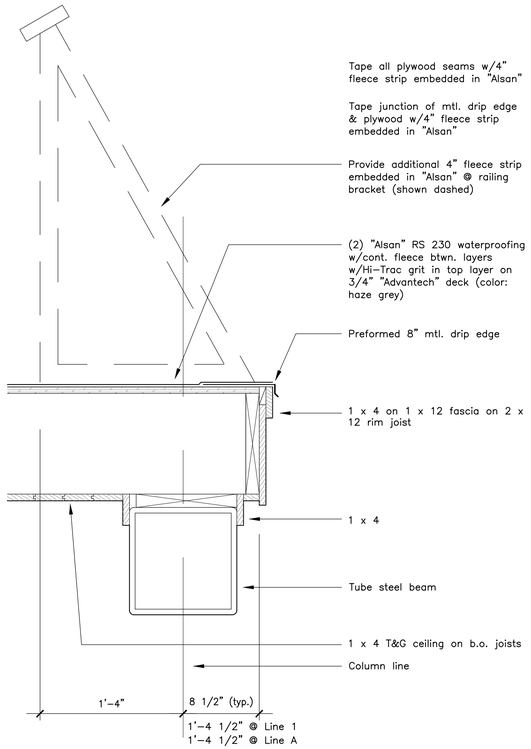

2 Detail @ Edge of Deck

Scale: 1 1/2" = 1'-0"

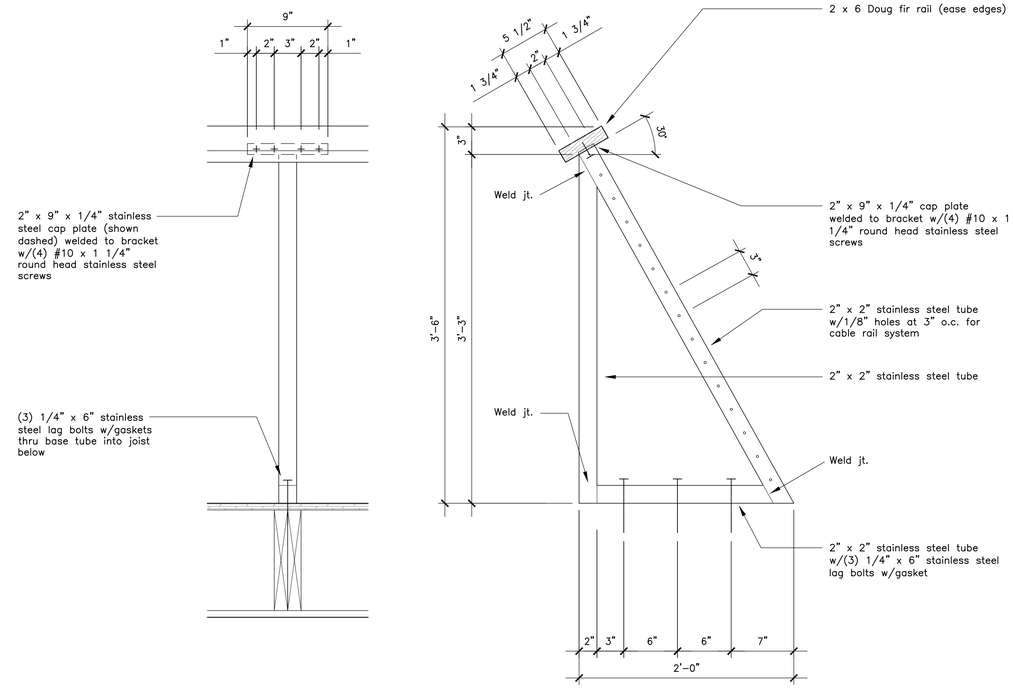

1 Detail @ Railing

Scale: 1 1/2" = 1'-0"

David Matero
Architecture

100 Front Street
Suite 40
Bath, Maine 04530
207.671.6820
david@davidmatero.com

Consultants

Casco Bay Engineering
Structural Engineer

Revisions

02.17.16 State Fire Marshal Comments
07.06.16 Portland CEO Comments

Amigos Mexican Restaurant & Bar Roof Deck & Patio

7 Dana Street
Portland, Maine 04101

LICENSED ARCHITECT
DAVID S. MATERO
No. 2705
STATE OF MAINE

Job Number: 15.000
Date: 07.06.16
Scale: As Noted

Drawing Title:

Details

A3.3

Issued for Permit

Copyright 2016 David Matero Architecture, LLC