HVAC SERVICES, INC.

• ventilation • air conditioning • programmable thermostats •

Single Wall Round

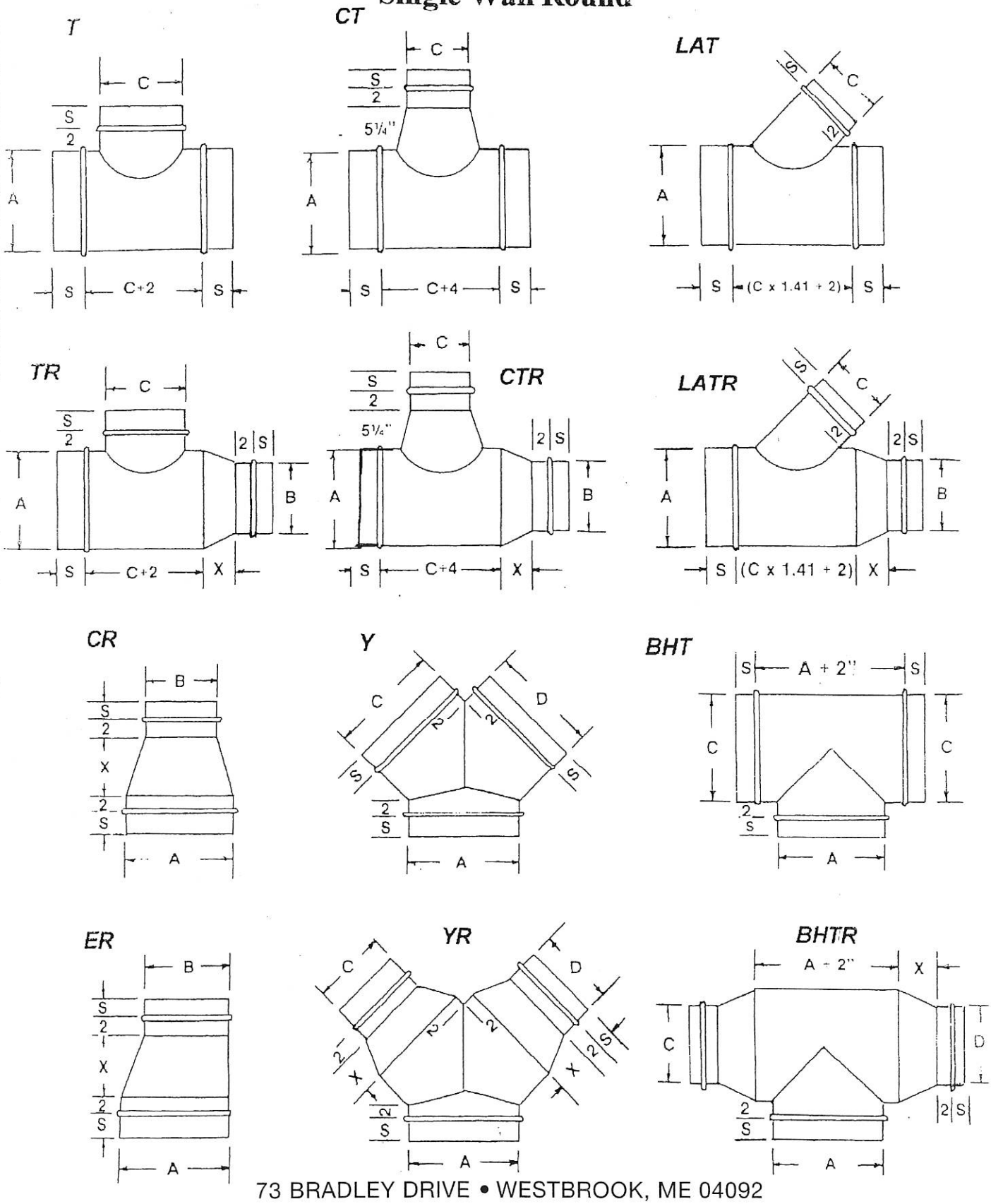

73 BRADLEY DRIVE • WESTBROOK, ME 04092
(207) 854-4822 (HVAC) • Fax: (207) 854-0775

• solar • computer rooms • geothermal • 24 hour service • air quality • heating - heat pumps • ventilation • air conditioning • programmable thermostats • energy management • maintenance contracts •