CODE ANALYSIS
M, (Mercantile)Construction Type 3B
Building to sprinklered per NFPA13

Relevant codes
NFPA 101 2009

Analysis for Exist. M use, Class C

Exit door may swing in, in class C	37.2.2.2.10
Single exit if travel distance <75'	37.2.4.3
Exit lighting per 7.5	37.2.8
Class C finish permitted thru out	37.3.3.3.2.(2)
Alarm initiation by sprinkler + 1 manual fire alarm	37.3.4.3(3)
Fire extinguishers required	NFPA 101 36.3.5.3, 9.7.4.1

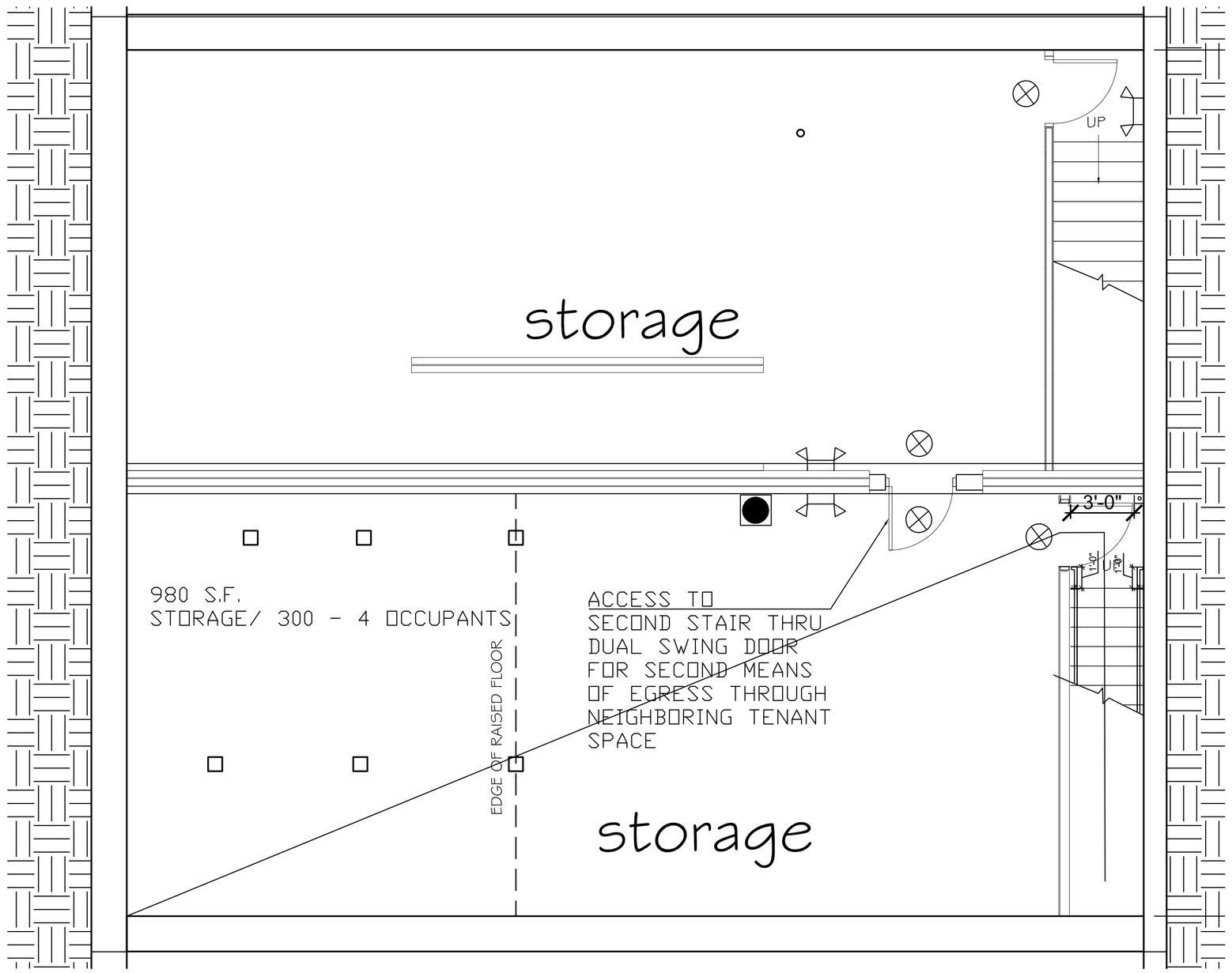

1 A1.03 BASEMENT PLAN
1/4" = 1'-0"

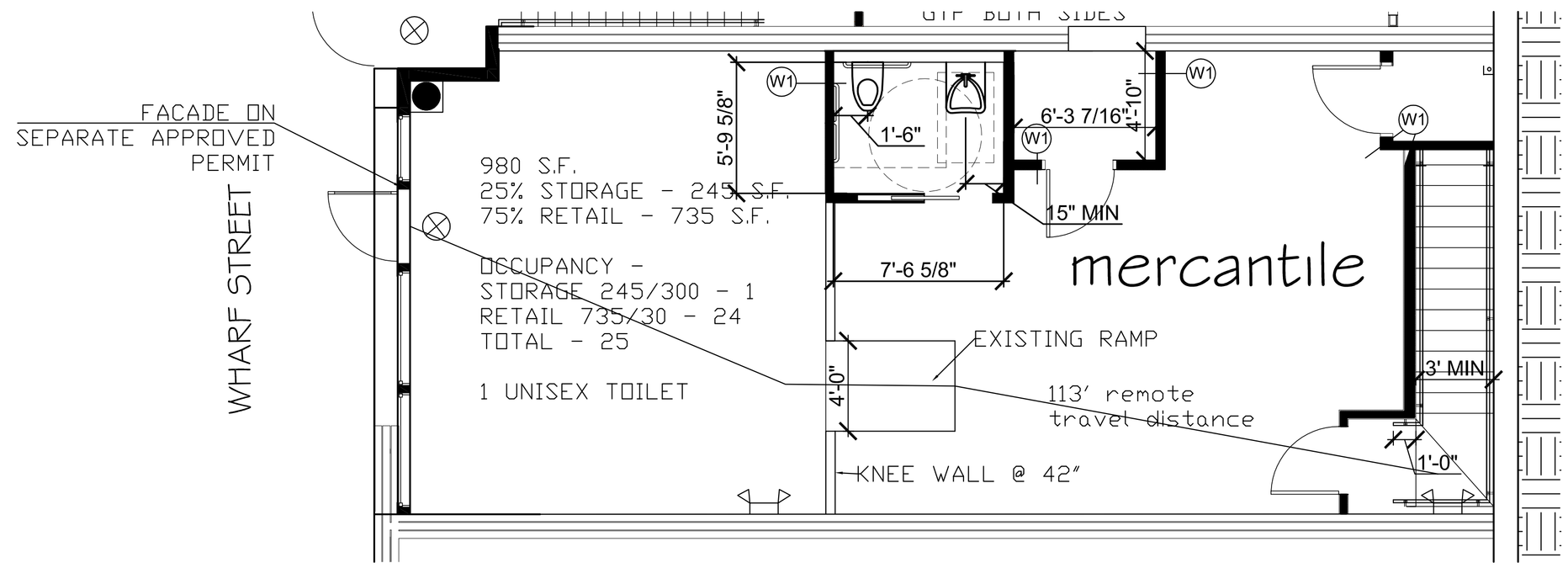

2 A1.03 WHARF STREET PLAN
1/4" = 1'-0"

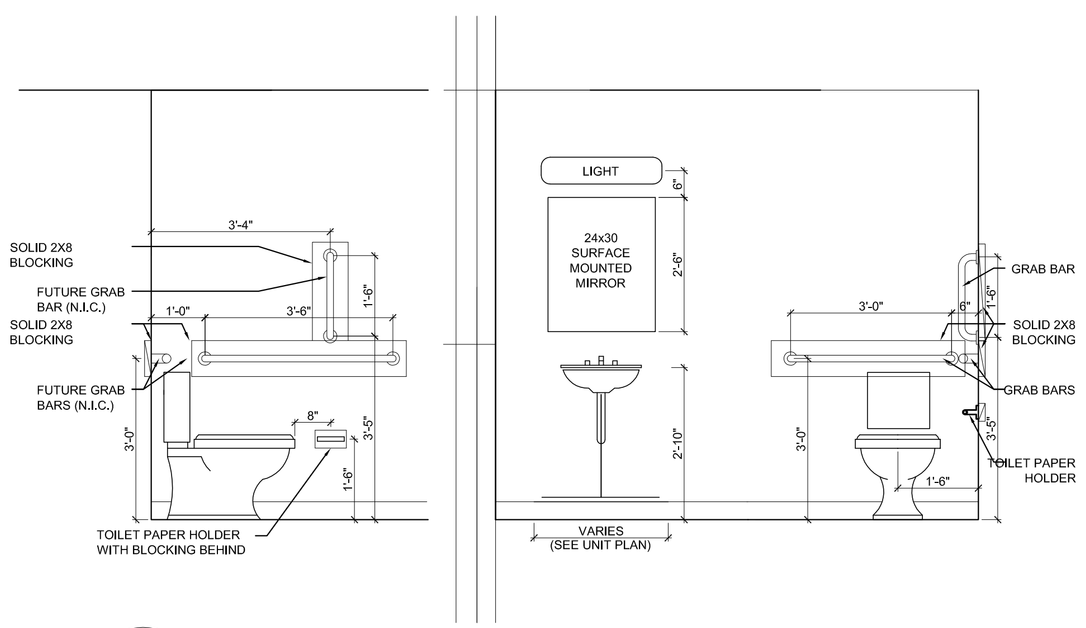

3 A1.03 ADA BATHROOM REQUIREMENTS
1/2" = 1'-0"

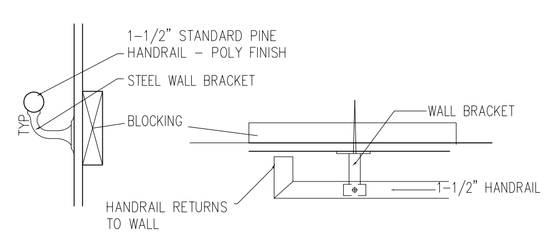

4 A1.03 HANDRAIL DETAILS
1/4" = 1'-0"

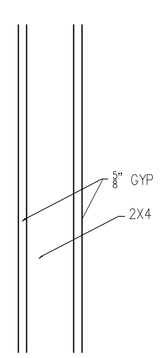

5 A1.03 W1 - WALL TYPE 1
1/4" = 1'-0"

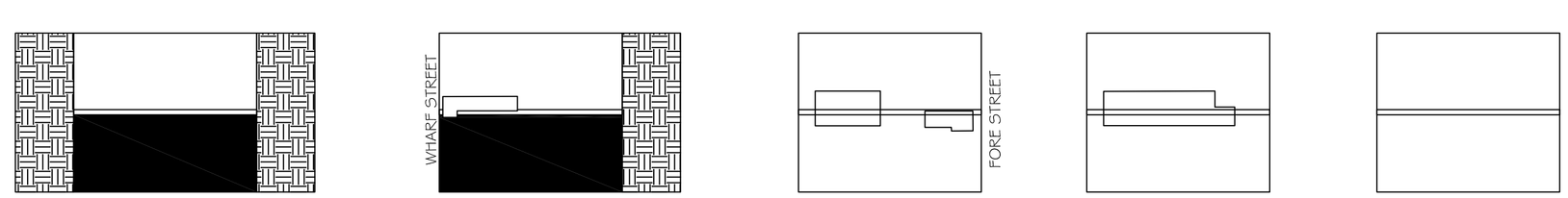

BASEMENT | WHARF STREET LEVEL | FORE STREET LEVEL | SECOND FLOOR | THIRD FLOOR

BUILDING KEY PLAN

REGISTERED ARCHITECT
WILLIAM KENNETH HOPKINS
No. 1060
STATE OF MAINE

Prepared For:

Consultant:

Architect: ARCHETYPE
48 Union Wharf Portland, Maine 04101
(207) 772-6022 Fax (207) 772-4056

Project: 416,418, 420 FORE STREET PHASE 3
424 FORE STREET PORTLAND, ME

Revisions: 7-1-2015 Revision to Submission Set

Scale: As indicated

Date: 6-19-2015

STYLE ME
PLANS & DETAILS

A1.03