Reviewed for Code Compliance
Inspections Division
Approved with Conditions

Date: 07/26/13

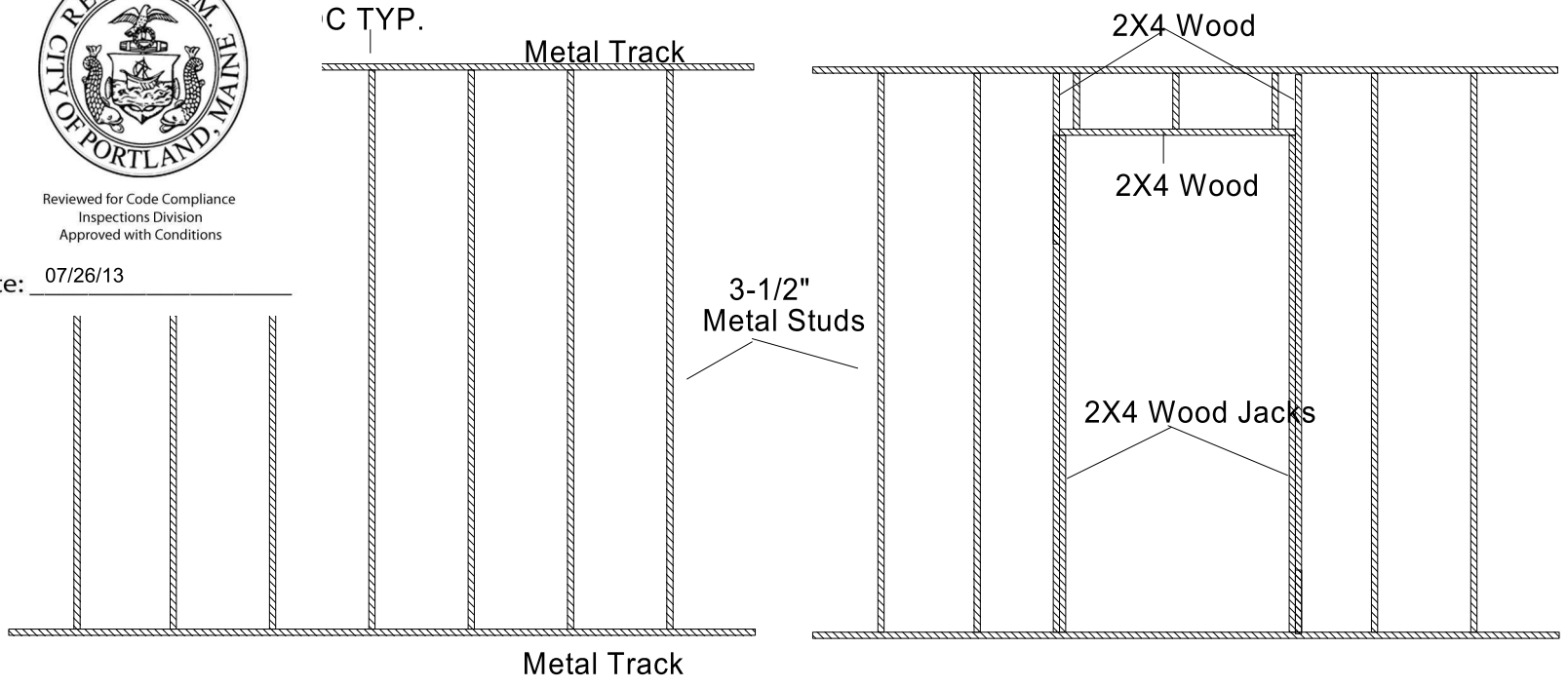

Wall Details