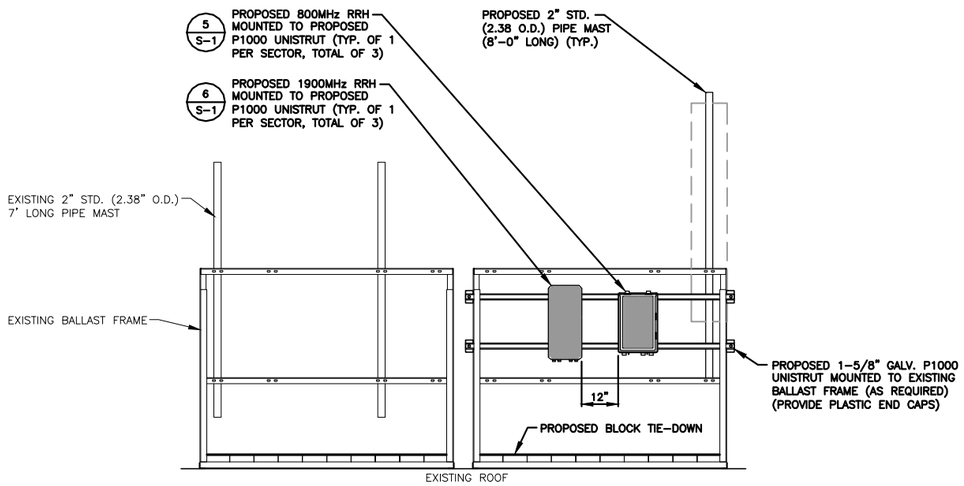

RRH ELEVATION (ALPHA AND BETA SECTORS)

1 / S-1

SCALE: 1/2" = 1'-0"

GRAPHIC SCALE 0 1'-0" 2'-0" 4'-0" 6'-0"

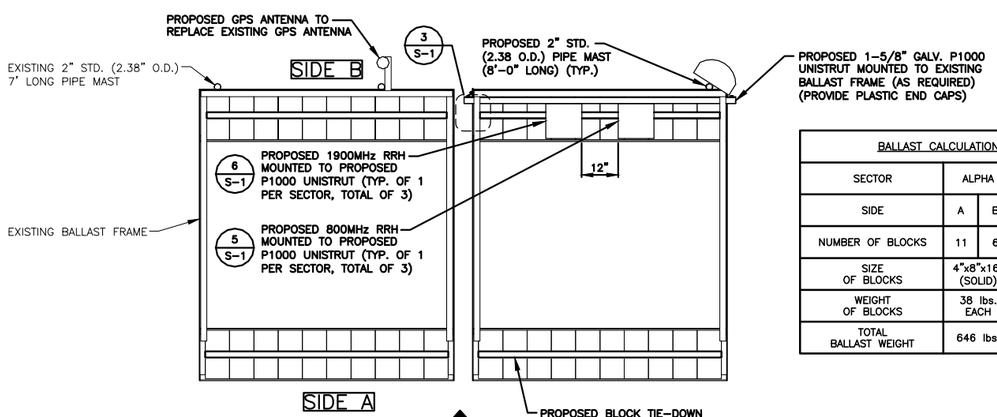

RRH PLAN (ALPHA AND BETA SECTORS)

2 / S-1

SCALE: 1/2" = 1'-0"

GRAPHIC SCALE 0 1'-0" 2'-0" 4'-0" 6'-0"

BALLAST CALCULATIONS				
SECTOR	ALPHA		BETA	
SIDE	A	B	A	B
NUMBER OF BLOCKS	11	6	11	6
SIZE OF BLOCKS	4"x8"x16" (SOLID)		4"x8"x16" (SOLID)	
WEIGHT OF BLOCKS	38 lbs. EACH		38 lbs. EACH	
TOTAL BALLAST WEIGHT	646 lbs.		646 lbs.	

NOTES:

1) PROPOSED EQUIPMENT TO BE MOUNTED PER MANUFACTURERS SPECIFICATIONS.

2) CONTRACTOR TO VERIFY THAT THERE IS SUFFICIENT ROOM BEHIND PROPOSED ANTENNAS FOR PROPOSED RRH'S TO BE LOCATED WITHOUT CONFLICTING WITH OTHER PROPOSED RRHS/MOUNTING PIPES ON ADJACENT SECTORS.

3) VERIFY EXACT RRH AND ANTENNA MODEL & AZIMUTHS WITH RF ENGINEER PRIOR TO INSTALLATION.

4) RRH LOCATION ONLY SHOWN AS REFERENCE. CONTRACTOR TO CONFIGURE RRH'S AS NEED TO MEET PROPOSED REQUIREMENTS.

STRUCTURAL NOTE:

STRUCTURAL INFORMATION TAKEN FROM STRUCTURAL ANALYSIS PERFORMED BY HUDSON DESIGN GROUP, LLC. DATED: DECEMBER 20, 2012

800MHz RRH WEIGHT: 53 LBS
800MHz NOTCH FILTER WEIGHT: 11 LBS

DIMENSIONS:
800MHz RRH: 15.8"Hx13"Wx10"D
800MHz NOTCH FILTER: 9"Hx9"Wx4"D

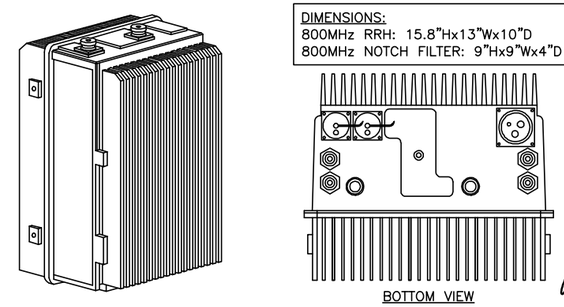

800MHz RRH

5 / S-1

SCALE: N.T.S.

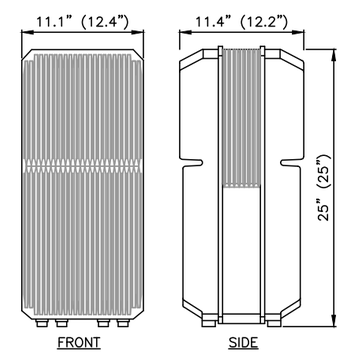

DIMENSIONS WITHIN PARENTHESES ARE FOR THE OPTIONAL SOLAR SHIELD

1900MHz RRH WEIGHT: 60 LBS

1900MHz RRH

6 / S-1

SCALE: N.T.S.

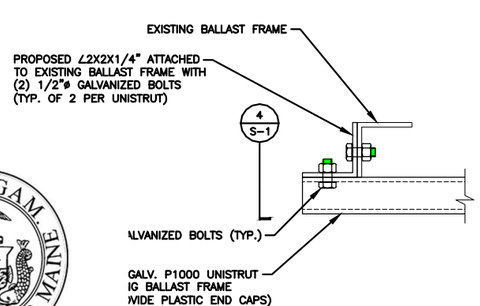

INECTION DETAIL

3 / S-1

3"=1'-0"

GRAPHIC SCALE 0 0'-2" 0'-4" 0'-8" 1'-0"

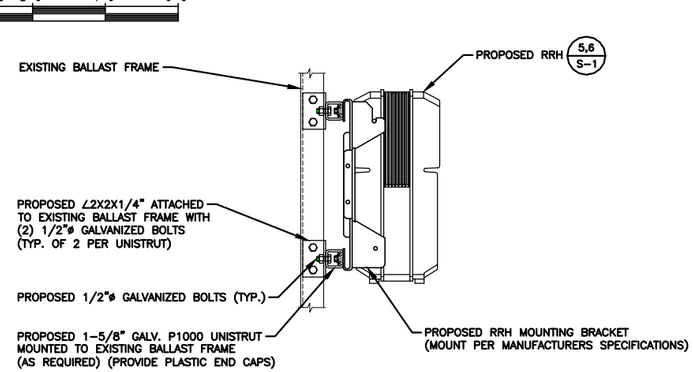

CONNECTION DETAIL

4 / S-1

SCALE: 1-1/2"=1'-0"

GRAPHIC SCALE 0 0'-1" 0'-2" 0'-4" 0'-6"

Sprint VISION
NETWORK VISION MMBTS LAUNCH
1 INTERNATIONAL BLVD, SUITE 800
MAHWAH, NJ 07495
TEL: (800) 357-7641

Alcatel·Lucent
1 ROBBINS ROAD
WESTFORD, MA 01886
TEL: (978) 952-1600

Hudson Design Group LLC
1600 OSGOOD STREET
BUILDING 20 NORTH, SUITE 3090
N. ANDOVER, MA 01845
TEL: (978) 557-5553
FAX: (978) 336-5586

STATE OF MAINE
DANIEL P. HAMM
LICENSED PROFESSIONAL ENGINEER

Daniel P. Hamm

CHECKED BY: JX

APPROVED BY: DPH

SUBMITTALS

REV.	DATE	DESCRIPTION	BY
3	05/20/13	FOR CONSTRUCTION	BR
2	05/03/13	FOR CONSTRUCTION	SR
1	04/08/13	ISSUED FOR REVIEW	SF

SITE NUMBER:
NM03XC067

SITE NAME:
ONE CITY CENTER

SITE ADDRESS:
ONE CITY CENTER
PORTLAND, ME 04101

SHEET TITLE
STRUCTURAL DETAILS

SHEET NUMBER
S-1

CITY OF PORTLAND, MAINE — RESURGAM

Reviewed for Code Compliance
Inspections Division
Approved with Conditions

Date: 07/26/13