CITY OF PORTLAND, MAINE
RESURGAM
Reviewed for Code Compliance
Inspections Division
Approved with Conditions
Date: 03/15/17

ANSUL®

RESTAURANT FIRE SUPPRESSION SYSTEMS DATA SHEET

MODEL R-102 (STANDARD UL 300 LISTED)

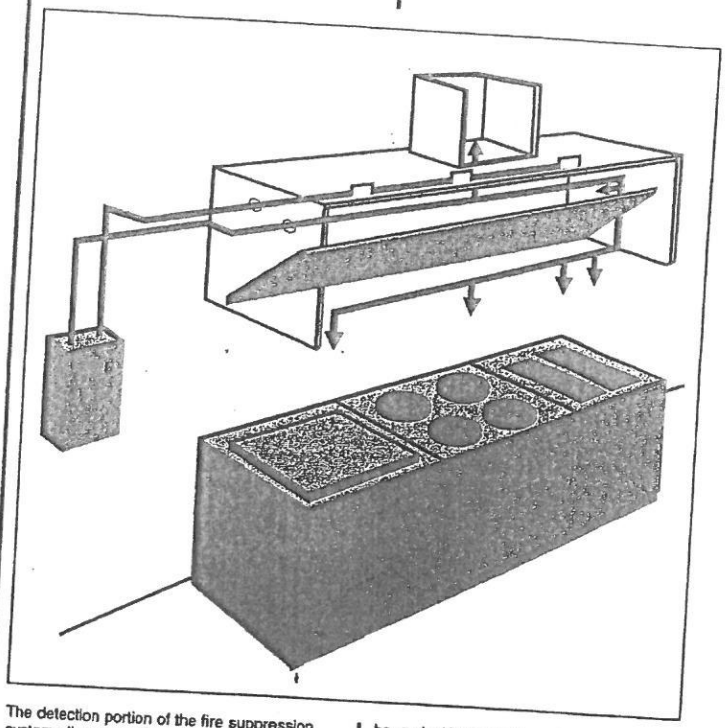

FEATURES

- Low pH Agent
- Proven Design
- Reliable Cartridge Operated
- Aesthetically Appealing
- UL Listed – Meets Requirements of UL 300

APPLICATION

The Ansul R-102 Restaurant Fire Suppression System is an automatic, pre-engineered, fire suppression system designed to protect the following areas associated with cooking equipment; ventilating equipment including hoods, ducts, plenums, and filters; fryers; griddles and range tops; upright, natural charcoal, or chain-type broilers; electric, lava rock, mesquite or gas-radiant char-broilers and woks.

The system is ideally suitable for use in restaurants, hospitals, nursing homes, hotels, schools, airports, and other similar facilities.

Use of the R-102 system is limited to interior applications only. The regulated release and tank assemblies must be mounted in an area where the air temperature will not fall below 32 °F (0 °C) or exceed 130 °F (54 °C). The system must be designed and installed within the guidelines of the UL Listed Design, Installation, Recharge, and Maintenance Manual.

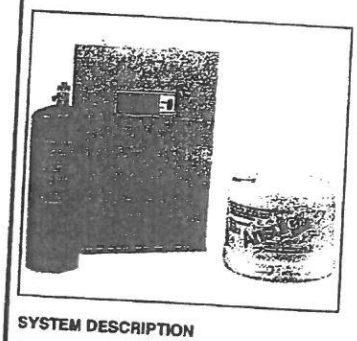

SYSTEM DESCRIPTION

The restaurant fire suppression system is a pre-engineered, wet chemical, cartridge-operated, regulated pressure type with a fixed nozzle agent distribution network. It is listed with Underwriters Laboratories, Inc. (UL).

The system is capable of automatic detection and actuation and/or remote manual actuation. Additional equipment is available for mechanical or electrical gas line shut-off applications.

The detection portion of the fire suppression system allows for automatic detection by means of specific alloy rated fusible links, which, when the temperature exceeds the rating of the link, the link separates, allowing the regulated release to actuate.

A system owner's guide is available containing basic information pertaining to system operation and maintenance. A detailed technical manual is also available including system description, design, installation, recharge, and maintenance procedures, plus additional equipment installation and resetting instructions.

The system is installed and serviced by authorized distributors that are trained by the manufacturer.

The basic system consists of an ANSUL AUTOMAN regulated release assembly which includes a regulated release mechanism and a wet chemical storage tank housed within a single enclosure. Nozzle blow-off caps, detectors, cartridges, agent, fusible links, and pulley elbows are supplied in separate packages in the quantities needed for fire suppression system arrangements.

Additional equipment includes remote manual pull station, mechanical and electrical gas valves, pressure switches, and electrical switches for automatic equipment and gas line shut-off. Accessories can be added such as alarms, warning lights, etc., to installations where required.

Tanks can be used in multiple arrangements to allow for larger hazard coverage. Each tank is limited to a listed maximum amount of flow numbers.

CITY OF PORTLAND, MAINE
RESURGAM
Reviewed for Code Compliance
Inspections Division
Approved with Conditions
Date: 03/15/17

ANSUL

R-102™ RESTAURANT SYSTEM
DISTRIBUTION PIPING REQUIREMENTS SHEET

Distribution Piping Requirements – 6.0 Gallon (22.7 Liter) Manifolded System

Requirements	Supply Line	Duct Branch Line	Plenum Branch Line	Appliance Branch Line
Pipe Size	3/8 in.	3/8 in.	3/8 in.	3/8 in.
Maximum Length	32 ft (9.7 m)	8 ft (2.4 m)	4 ft (1.2 m)	12 ft (3.7 m)
Maximum Rise	6 ft (1.8 m)	4 ft (1.2 m)	2 ft (0.6 m)	2 ft (0.6 m)
Maximum 90° Elbow	8	4	4	6
Maximum Tees	2	2	2	4
Maximum Flow Numbers	22	4	2	4

Distribution Piping Requirements – 6.0 (22.7 Liter) Gallon System

1. The maximum length between the start of the first branch line and the start of the last branch line must not exceed 24 ft (7.3 m). When the supply line is split, the combined total of both legs of the supply line (from the start of the first branch line to the start of the last branch line) must not exceed 24 ft (7.3 m).
2. The total length of all branch lines must not exceed 36 ft (10.9 m).
3. Use a 3/8 in. union to connect the tank adaptor to the 3/8 in. supply line.

Distribution Piping Requirements – 9.0 (34 Liter) Gallon System

Requirements	Supply Line	Duct Branch Line	Plenum Branch Line	Appliance Branch Line
Pipe Size	3/8 in.	3/8 in.	3/8 in.	3/8 in.
Maximum Length	40 ft (12.2 m)	8 ft (2.4 m)	4 ft (1.2 m)	12 ft (3.7 m)
Maximum Rise	6 ft (1.8 m)	4 ft (1.2 m)	2 ft (0.6 m)	2 ft (0.6 m)
Maximum 90° Elbow	9	4	4	6
Maximum Tees	1	2	2	4
Maximum Flow Numbers	11*	4	2	4

***Exceptions:**

1. Twelve (12) flow numbers are allowed in any one tank for hood and duct protection.
2. Twelve (12) flow numbers are allowed with any one tank using only two-flow appliance nozzles.
3. Twelve (12) flow numbers are allowed with any one tank using only three-flow appliance nozzles.

Special Instructions:

1. Twelve (12) flow numbers are allowed when four (4) Dean Industries GTI Gas Fryers are protected at low proximity.
2. For certain McDonald's applications, 11.5 flow numbers are allowed when using a combination of one (1) 2W duct nozzle, one (1) 1/2N electrostatic precipitator nozzle, one (1) 1N plenum nozzle, and four (4) two-flow appliance nozzles. Contact ANSUL Applications Engineering Department for additional information.

Distribution Piping Requirements – 9.0 (34 Liter) Gallon System

1. The maximum length between the start of the first branch line and the start of the last branch line must not exceed 24 ft (7.3 m). When the supply line is split, the combined total of both legs of the supply line (from the start of the first branch line to the start of the last branch line) must not exceed 24 ft (7.3 m).
2. The total length of all branch lines must not exceed 36 ft (10.9 m).
3. Use a 3/8 in. union to connect the tank adaptor to the 3/8 in. supply line.

General Piping Requirements

1. All R-102 system piping is straight line. Therefore, the need for critical lengths and balancing is minimized.
2. Two 45° elbows count as one 90° elbow.
3. Each branch line includes the tee or elbow leading to it, and all fittings within the branch line itself.
4. The minimum piping length of Schedule 40, 3/8 in. pipe from the tank outlet to any nozzle protecting a range, fryer, or wok must be 6 ft (1.8 m).
5. Pipe lengths are measured from center of fitting to center of fitting.
6. All distribution piping must be Schedule 40 black iron, chromeplated, or stainless steel. Do not use hot dipped galvanized pipe on the distribution piping.
7. All threaded connections located in and above the protected area must be sealed with pipe tape. Tape should be applied to male threads only. Make certain tape does not extend over the end of the thread, as this could cause possible blockage of the agent distribution.

 Copyright ©2008 Ansul Incorporated

CITY OF PORTLAND, MAINE
RESURGAM
Reviewed for Code Compliance
Inspections Division
Approved with Conditions
Date: 03/15/17

ANSUL

R-102™ RESTAURANT SYSTEM
DISTRIBUTION PIPING REQUIREMENTS SHEET

Distribution Piping Requirements – 1.5 Gallon (5.6 Liter) System

Requirements	Supply Line	Duct Branch Line	Plenum Branch Line	Appliance Branch Line
Pipe Size	3/8 in.	3/8 in.	3/8 in.	3/8 in.
Maximum Length	40 ft (12.2 m)	6 ft (1.8 m)	4 ft (1.2 m)	10 ft (3 m)
Maximum Rise	6 ft (1.8 m)	4 ft (1.2 m)	2 ft (0.6 m)	2 ft (0.6 m)
Maximum 90° Elbow	9	4	4	6
Maximum Tees	1	1	2	3
Maximum Flow Numbers	5*	2	2	3

*** Exceptions:**

1. Six (6) flow numbers are allowed when a duct branch line is the last branch line on the piping network and no 1N nozzles, Part No. 56930, are used to protect woks or griddles.
2. Six (6) flow numbers are allowed when six (6) 1N nozzles, Part No. 56930, are used and none of the nozzles are used to protect woks and griddles. **Note:** Only five (5) flow numbers are allowed if a 1N nozzle is used for wok or griddle protection.
3. Six (6) flow numbers are allowed when only two (2) 3N nozzles, Part No. 76782, are used.

Distribution Piping Requirements – 1.5 Gallon (5.6 Liter) System

1. This option allows for duct protection, plenum protection, appliance protection, or any combination.
2. When using a combination of plenum and duct protection only, only one duct nozzle, either a 1W, 1100, or a 2W, may be used.
3. The maximum length between the start of the first branch line and the start of the last branch line must not exceed 8 ft (2.4 m). When the supply line is split, the combined total of both legs of the supply line (from the start of the first branch line to the start of the last branch line) must not exceed 8 ft (2.4 m).
4. The total length of all branch lines must not exceed 22 ft (6.7 m).
5. Use a 3/8 in. union to connect the tank adaptor to the 3/8 in. supply line.

Distribution Piping Requirements – 3.0 Gallon (11.3 Liter) System

Requirements	Supply Line	Duct Branch Line	Plenum Branch Line	Appliance Branch Line
Pipe Size	3/8 in.	3/8 in.	3/8 in.	3/8 in.
Maximum Length	40 ft (12.2 m)	8 ft (2.4 m)	4 ft (1.2 m)	12 ft (3.7 m)
Maximum Rise	6 ft (1.8 m)	4 ft (1.2 m)	2 ft (0.6 m)	2 ft (0.6 m)
Maximum 90° Elbow	9	4	4	6
Maximum Tees	1	2	2	4
Maximum Flow Numbers	11*	4	2	4

***Exceptions:**

1. Twelve (12) flow numbers are allowed in any one tank for hood and duct protection.
2. Twelve (12) flow numbers are allowed with any one tank using only two-flow appliance nozzles.
3. Twelve (12) flow numbers are allowed with any one tank using only three-flow appliance nozzles.

Special Instructions:

1. Twelve (12) flow numbers are allowed when four (4) Dean Industries GTI Gas Fryers are protected at low proximity.
2. For certain McDonald's applications, 11.5 flow numbers are allowed when using a combination of one (1) 2W duct nozzle, one (1) 1/2N electrostatic precipitator nozzle, one (1) 1N plenum nozzle, and four (4) two-flow appliance nozzles. Contact ANSUL Applications Engineering Department for additional information.

Distribution Piping Requirements – 3.0 Gallon (11.3 Liter) System

1. The maximum length between the start of the first branch line and the start of the last branch line must not exceed 24 ft (7.3 m). When the supply line is split, the combined total of both legs of the supply line (from the start of the first branch line to the start of the last branch line) must not exceed 24 ft (7.3 m).
2. The total length of all branch lines must not exceed 36 ft (10.9 m).
3. Use a 3/8 in. union to connect the tank adaptor to the 3/8 in. supply line.

Reviewed for Code Compliance
Inspections Division
Approved with Conditions
Date: 03/15/17

ANSUL
A Tyco International Company

R-102 RESTAURANT SYSTEM
NOZZLE COVERAGE/OVERLAPPING SUMMARY SHEET

Plenum	Nozzle Type	Flow Points	Width in. (cm) Max. Side	Length in. (cm) Max. Side	Nozzle Placement (See Manual for More Detail)	Min. Height in. (cm)	Max. Height in. (cm)
Horizontal Protection Single Bank	1N	1	48 (122)	120 (305)	0 in. to 6 in. (0 to 15.2 cm) from end of plenum	2 (5)	4 (10)
Perpendicular Protection Single Bank	1W	1	48 (122)	48 (122)	See Manual for more detail	1 (2.5)	20 (51)
Horizontal Protection V-Bank	2 x 1N	2	48 (122)	120 (305)	0 in. to 6 in. (0 to 15.2 cm) from end of plenum	2 (5)	4 (10)
Horizontal Protection V-Bank	1W	1	48 (122)	72 (183)	0 in. to 6 in. (0 to 15.2 cm) from end of plenum	1/3 the height of filter	
Perpendicular Protection V-Bank	1W	1	48 (122)	48 (122)	See Manual for more detail	1 (2.5)	20 (51)

Duct	Nozzle Type	Flow Points	Perimeter in. (cm)	Diameter in. (cm)	Nozzle Placement (See Manual for More Detail)	Duct Length in. (cm)
Single Nozzle 1 Flow Nozzle	1W	1	50 (127)	16 (41)	See Manual for more detail	Unlimited
Single Nozzle 2 Flow Nozzle	2W	2	100 (254)	31 7/8 (81)	See Manual for more detail	Unlimited
Multiple Nozzle	2W + 1W	3	135 (343)	48 (122)	See Manual for more detail	Unlimited
Multiple 2W Nozzle	2W	–	>135 (343)	>135 (343)	See Manual for more detail	Unlimited

R-102 OVERLAPPING PROTECTION

The 245 nozzle, Part No. 419340, must be used for "end of zone" protection, and the 260 nozzle, Part No. 419341, must be used for "zone" protection.

Appliance Type	Maximum Cooking Hazard
Fryer	34 in. (864 mm) Deep x 5.8 ft² (5388 cm²)
Griddle	30 in. (762 mm) Deep x Unlimited Length
Range	30 in. (762 mm) Deep x Unlimited Length
Wok, Maximum	30 in. (762 mm) Diameter x 8 in. (203 mm) Deep
Wok, Minimum	11 in. (279 mm) Diameter x 3 in. (76 mm) Deep
Braising Pan/Tilt Skillet [1]	34 in. (864 mm) Deep x Unlimited Length
Lava Rock Char-Broiler	26 in. (660 mm) Deep x Unlimited Length
Charcoal Broiler	30 in. (762 mm) Deep x Unlimited Length (4 in. (102 mm) Maximum Fuel Depth)
Mesquite Wood Broiler	30 in. (762 mm) Deep x Unlimited Length (6 in. (152 mm) Maximum Fuel Depth)
Gas Radiant Char-Broiler	36 in (914 mm) Deep x Unlimited Length
Electric Char-Broiler	34 in. (864 mm) Deep x Unlimited Length

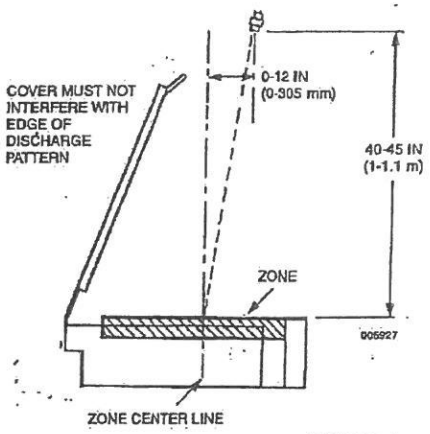

FIGURE 1

[1] See Figure 1 for nozzle location.

Note: Group protection option is required for appliances on either side of an appliance(s) using dedicated protection – see manual for details.

Overlapping System Piping Limitations

System Size	Total Flow Numbers	Max. 3/8 in. Pipe Length	Max. No. of Elbows	Maximum Elevation Rise	Cartridge Size
3 Gal (11 L)	6	75 ft (22.9 m)	25	10 ft (3.1 m)	LT-30-R
6 Gal (23 L) Manifolded	12	75 ft (22.9 m)	25	10 ft (3.1 m)	Double Tank

50 ft (15.2 m) maximum pipe from first to last nozzle.

50 ft (15.2 m) maximum pipe after the split on a split system.

TYCO FIRE PROTECTION PRODUCTS
ONE STANTON STREET
MARINETTE, WI 54143-2542 +1-715-735-7411

Copyright ©2011 Tyco Fire Protection Products
All rights reserved.
Form No. F-2005010-03

Reviewed for Code Compliance
Inspections Division
Approved with Conditions
Date: 03/15/17

ANSUL

A Tyco International Company

R-102 RESTAURANT SYSTEM
NOZZLE COVERAGE/OVERLAPPING SUMMARY SHEET

Appliance	Nozzle Type	Flow Points	Width In. (cm) Max. Side	Multiple Length In. (cm) Max. Side	Multiple Nozzle w/o Drip Board Area In² (cm²)	Nozzle w/ Drip Board Area In² (cm²)	Minimum Nozzle Ht. In. (cm)	Maximum Nozzle Ht. In. (cm)
Fryers without drip boards	230/290*	2	14 (36)	15 (38)	—	—	27/13 (69/33)	47/16 (119/41)
*Low Proximity Split or No Split Vat	245/290*	2	14/14.5 (36/37)	15/14 (38/36)	—	—	20/16 (51/41)	27/27 (69/69)
Fryers without drip boards	290	2	19.5 (50)	19 (48.2)	—	—	13 (33)	16 (41)
Non-Split Vat (ONLY)	3N	3	19.5 (50)	19 (48.2)	—	—	21 (53)	34 (86)
	3N	3	18 (45.7)	18 (45.7)	—	—	25 (64)	35 (89)
Fryers with drip boards	230/290*	2	14 (36)	21 (53)	210 (1355)	294 (1897)	27/13 (69/33)	47/16 (119/41)
*Low Proximity Split or No Split Vat[1]	245/290*	2	14/14.5 (36/37)	21/26.5 (53/67)	210/203 (1355/1310)	294/384.2 (1897/2479)	20/16 (51/41)	27/27 (69/69)
Fryers with drip boards[1]	290	2	19.5 (50)	25 3/8 (65)	370.5 (2390)	495 (3194)	13 (33)	16 (41)
Non-Split Vat (ONLY)	3N	3	19.5 (50)	25 3/8 (65)	370.5 (2390)	495 (3194)	21 (53)	34 (86)
	3N	3	18 (45.7)	27 3/4 (70.5)	324 (2090)	497 (3206)	25 (64)	35 (89)
Tilt Skillet/Braising Pan[2]	Coverage limitation are based on fryer sizes including the drip boards. Exception: Tilt Skillets and Braising may exceed the maximum of 6 ft² (0.56 m²)							
				Longest Side	Max. Area In² (cm²)			
Range	1N	1	12 (30.5)	32 (81)	384 (2477)	—	30 (76)	40 (102)
With or without back shelf**	1N	1	18 (45.7)	24 (61)	— —	—	15 (38.1)	20 (50.8)
Without back shelf	1F	1	12 (30.5)	28 (71)	336 (2168)	—	30 (76)	50 (127)
With back shelf[4]	1F	1	12 (30.5)	28 (71)	336 (2168)	—	40 (102)	48 (122)
	245	2	24 (61)	28 (71)	—	—	40 (102)	50 (127)
Without back shelf	260	2	24 (61)	32 (81)	768 (4955)	—	30 (76)	40 (102)
With back shelf[7]	260	2	12 (30.5)	32 (81)	384 (2477)	—	30 (76)	40 (102)
	2 x 290	4	36 (91)	28 (71)	1008 (6503)	—	15 (38)	20 (51)
Griddle	1N/1NSS	1	36 (91)	30 (76)	—	—	35 (89)	40 (102)
	290	2	30 (76)	24 (61)	—	—	30 (76)	50 (127)
	260	2	48 (122)	30 (76)	—	—	30 (76)	50 (127)
	290	2	48 (122)	30 (76)	—	—	20 (51)	30 (76)
	2120	2	48 (122)	30 (76)	—	—	10 (25)	20 (51)
Chain Broiler[3] (Overhead Protection)	2 x 1W	2	34 (86)	30 (76)	—	—	10 (25)	26 (66)
Chain Broiler (Horizontal Protection)	2 x 1N	2	31 (79)	43 (109)	—	—	Front edge; 1 to 3 in. (3 to 8 cm) above the chain	
Char Broiler Gas-Radiant	1N/1NSS	1	24 (61)	36 (91)	—	—	15 (38)	40 (102)
Electric	1N/1NSS	1	20 (51)	34 (86)	—	—	20 (51)	50 (127)
Lava-Rock	1N/1NSS	1	13 (33)	24 (61)	—	—	18 (46)	35 (89)
Natural Charcoal[4]	1N/1NSS	1	12 (30.5)	24 (61)	—	—	18 (46)	40 (102)
Lava-Rock or Natural Charcoal[4]	3N	3	24 (61)	30 (76)	—	—	14 (36)	40 (102)
Wood Fueled[5]	3N	3	24 (61)	30 (76)	—	—	14 (36)	40 (102)
Upright Broiler	2 x 1/2N	1	30 (76)	32.5 (82.5)			Front edge; above the grate	
Salamander Broiler	2 x 1/2N	1	30 (76)	32.5 (82.5)	—	—		
	1N	1	16 (41)	29 (74)	—	—	—	—
	1N nozzle location to be on the vertical edge 6 to 12 in. (15.2 to 30.5 cm) in front and 0 to 12 in. (0 to 30.5 cm) above the top of broiler							
See manual for nozzle location	1F	1	31 (79)	15 (38)	—	—	—	—
Internal Chamber	1N	1	16 (41)	29 (74)	—	—	6-12 in. above either end (15.2 to 30.5 cm)	
Wok 3.75 to 8 in. deep (9.5 to 20.3 cm)	260	2	14 to 30 in. (36 to 76 cm) diameter		—	—	35 (89)	45 (114)
3 to 6 in. (7.6 to 15.2 cm) deep	1N/1NSS	1	11 to 24 in. (28 to 61 cm) diameter		—	—	30 (76)	40 (102)

[1] For multiple nozzle protection of single fryers, see detailed information on pages 4-8 to 4-11 of manual.

[2] See Figure 1 for nozzle location.

[3] Minimum chain broiler exhaust opening – 12 in. x 12 in. (30.5 cm x 30.5 cm), and not less than 60% of internal broiler size.

[4] 4 in. (10 cm) maximum fuel depth.

[5] 6 in. (15 cm) maximum fuel depth.

[6] Shelf can overhang burner(s) by maximum of 11 in. (28 cm) and height limitation of 20 in. (51 cm) from bottom of lowest part of shelf to the top of burner grate.

[7] Shelf can overhang burner(s) by maximum of 11 in. (28 cm) and height limitation of 18 in. (45.7 cm) from bottom of lowest part of shelf to the top of burner grate.

* Low Proximity

** A back-shelf can only be utilized if the nozzle(s) is installed below the shelf.