Reviewed for Code Compliance
Inspections Division
Date: 06/19/17

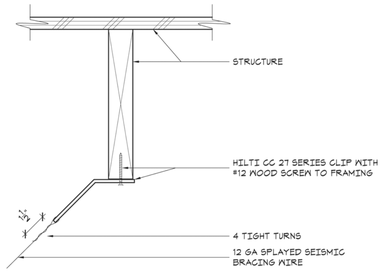

19 – BRACING WIRE ATTACHMENT

3"=1'-0"

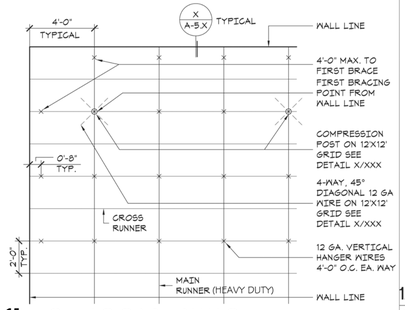

15 – CEILING GRID FRAMING

1/4"=1'-0"

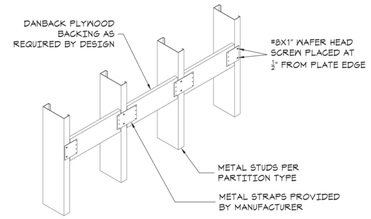

12 – MANUFACTURER'S BACKING DETAIL

DIETRICH OR EQUAL NTS

ALL WALLS ARE PARTITION WALLS (NOT STRUCTURE)

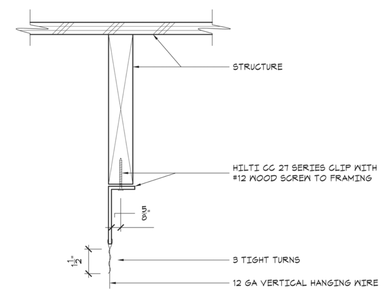

18 – VERTICAL HANGING WIRE ATTACHMENT

3"=1'-0"

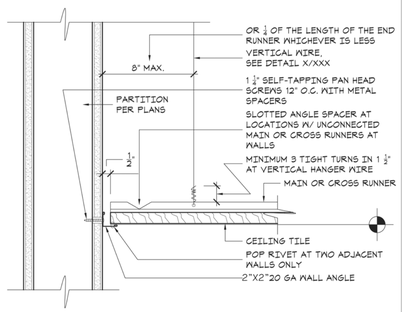

14 – CEILING AT WALL

3"=1'-0"

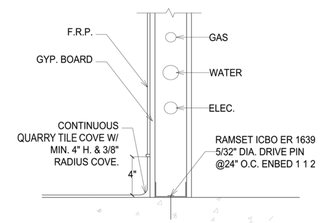

20 - SECTION OF TYP. WALL DETAIL

NTS

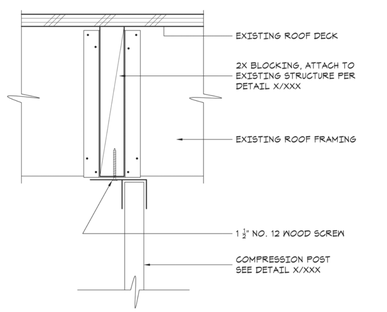

17 – COMPRESSION POST ATTACHMENT

3"=1'-0"

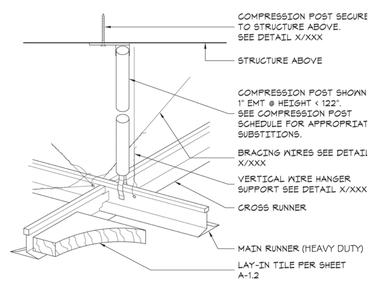

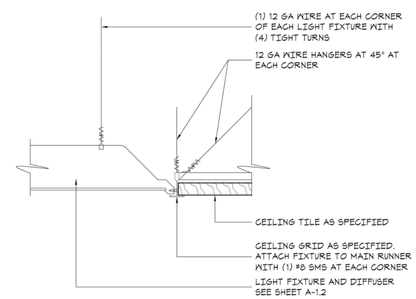

10 – LIGHT FIXTURE AT CEILING GRID

3"=1'-0"

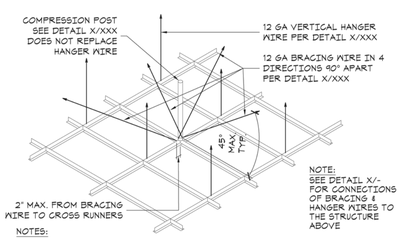

NOTES:

1. REFER TO CBC T24-SECTION 4701(e) FOR ADDITONAL REQUIREMENTS.
2. MAIN RUNNERS SHALL BE SPLICED BY LAPPING AND INTERLOCKING FLANGES 12" MINIMUM AND TYING NEAR EACH END WITH DOUBLE LOOPS OF #16 GA. WIRE.
3. CROSS FURRING SHALL BE SPLICED BY LAPPING AND INTERLOCKING THE PIECES 8" MINIMUM AND TYING NEAR EACH END WITH DOUBLE LOOPS OF #16 GA. WIRE.

16 – DIAGRAMATIC ATTACHMENT

NTS

COMPRESSION STRUT SCHEDULE:

SINGLE MEMBER	MAXIMUM HEIGHT	COMMENT
1" EMT PIPE	122"	1" EMT PIPE: 1.183" O.D., .057" WALL THICKNESS, r=1.63201, L/r RATIO @ 1:200 MAX: 200/1.63207 = 122.54"
25 GA X 2-1/2"	84"	
25 GA X 3-1/2"	81"	
20 GA X 1-5/8"	121"	
20 GA X 2-1/2"	121"	
20 GA X 3-1/2"	91"	

DOUBLE MEMBER	MAXIMUM HEIGHT	COMMENT
25 GA X 2-1/2"	202"	
25 GA X 3-1/2"	212"	
20 GA X 1-5/8"	138"	
20 GA X 2-1/2"	207"	
20 GA X 2-1/2"	213	
20 GA X 6"	324"	

13 - INSTALLATION AT COMPRESSION STRUT

NTS

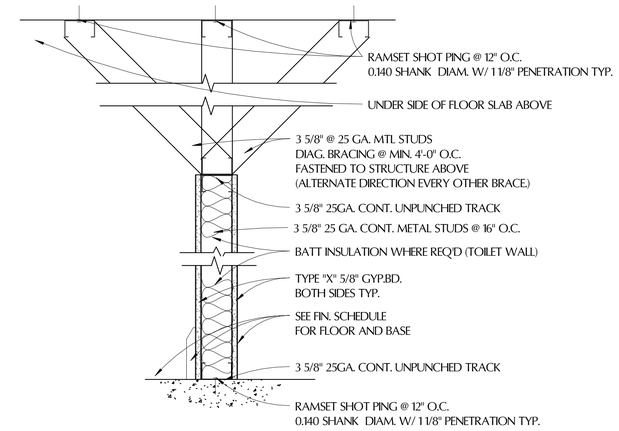

1 TYPICAL GYP. BD. PARTITION DETAIL
1 1/2" = 1'-0"

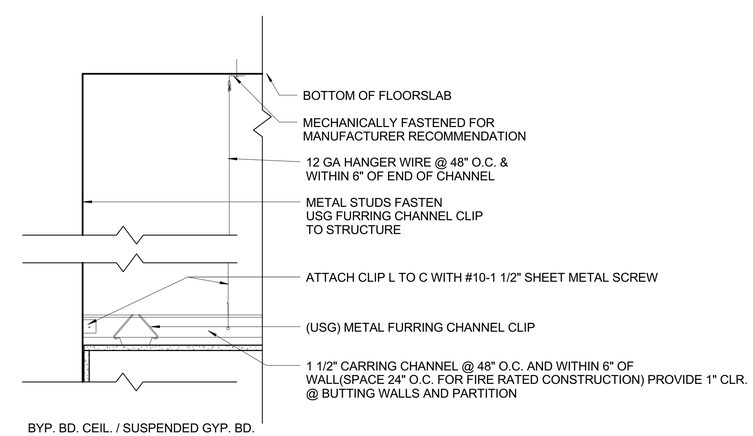

3 BYP. BD. CEIL. / SUSPENDED GYP. BD. CEIL.
1 1/2" = 1'-0"

REVISION

Tenant Improvement
Old Port Lobster Shack

425 FORE STREET
PORTLAND ME

PROJECT NUMBER	150101
DRAWN	Author
CHECKED	Checker
DATE	
SCALE	

FRAMING / T-BAR CEILING / FLOOR PENETRATION DETAILS

A-6.1