22x34 SHEET
1:1

EXHIBIT-11

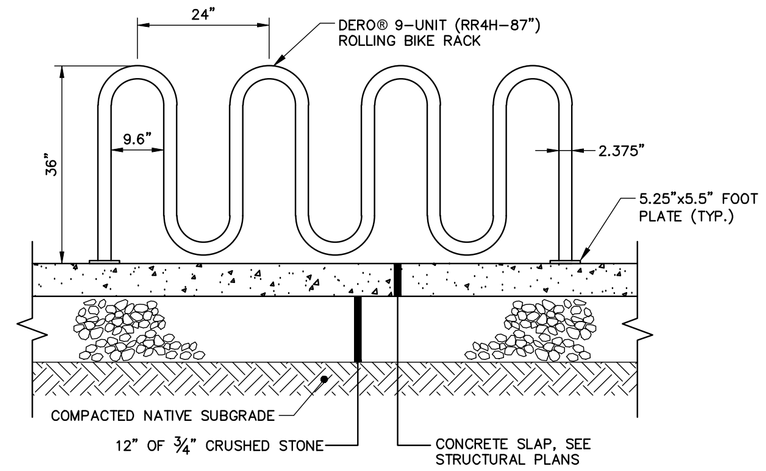

ROLLING RACK

Tools Needed for Installation

Tape Measure
Marker or Pencil
Masonry Drill Bit
Drill (Hammer drill recommended)
Hammer
Wrench 9/16"
Level
Washers (for leveling if necessary)

Recommended Base Materials:

Solid concrete is the best base material for installation. Ask your Dero Rack representative which anchor is appropriate for your application to ensure the proper anchors are shipped with your rack. Be sure nothing is underneath the base material that could be damaged by drilling.

Installation:

3/8" anchors are shipped with the rack. Place the rack in the desired location. Use a marker or pencil to outline the holes of the flange onto the base material. Drill the holes in accordance with the specifications shipped with the anchors. Make sure the holes are at least 6" away from any cracks in the base material.

Tamper Resistant Fasteners

The concrete spike is a permanent anchor. The top of the wedge anchor can also be pounded sideways after installation so that it cannot be removed. Other tamper resistant fasteners are also available for purchase.

When using the special tamper resistant nuts, always set and first tighten the anchors. Once the rack is installed, replace two nuts from the bracket (opposite sides from each other) with the tamper resistant fastener. DO NOT OVERTIGHTEN the tamper resistant nut.

If you have any questions about installation or other features of the Bike Bike Rack, please call us toll free at 1-800-298-4915

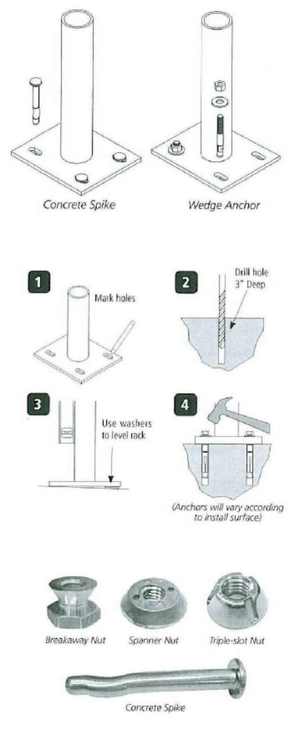

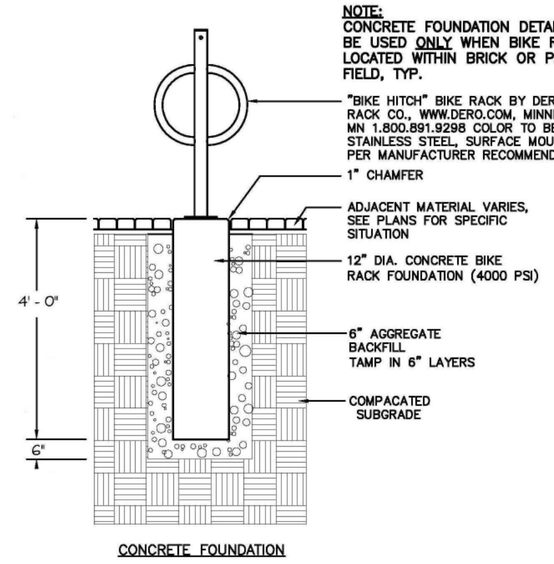

BIKE HITCH

TYPICAL BIKE RACK DETAILS
N.T.S.

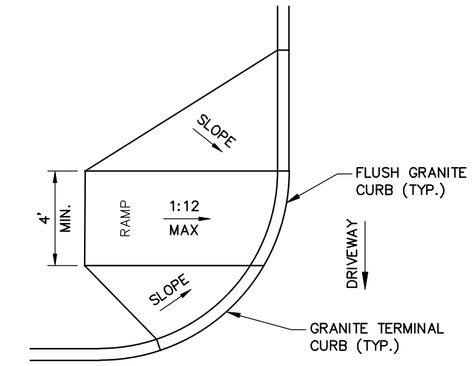

TYPICAL ADA RAMP AT DRIVEWAY

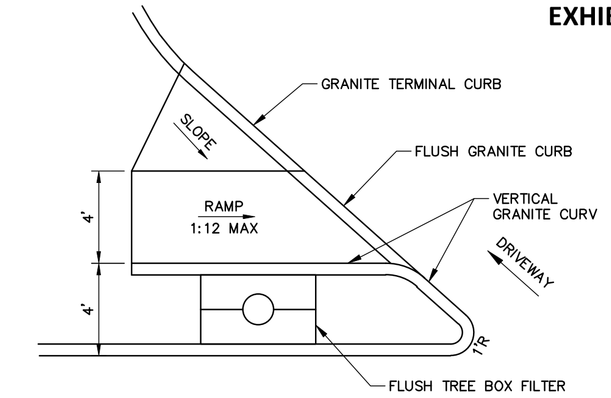

ADA RAMP AT FORE STREET
DRIVEWAY ENTRANCE

NOTES:

ALL RAMPS SHALL COMPLY WITH ADA STANDARDS.

LANDING AREA MAY BE REQUIRED BASED ON SIDEWALK DIMENSIONS.

GRANITE CURB ADJACENT TO LANDING SHALL BE FLUSH WITH STREET.

SIDEWALK MATERIAL PER CITY SIDEWALK MATERIAL POLICY.

FLARED SECTIONS SHOULD MATCH THE SURFACE MATERIAL USED FOR THE SIDEWALK CONSTRUCTION.

FLARE MINIMUM:
4'-0" – SIDEWALK WITH ESPLANADE
7'-0" – SIDEWALK ONLY

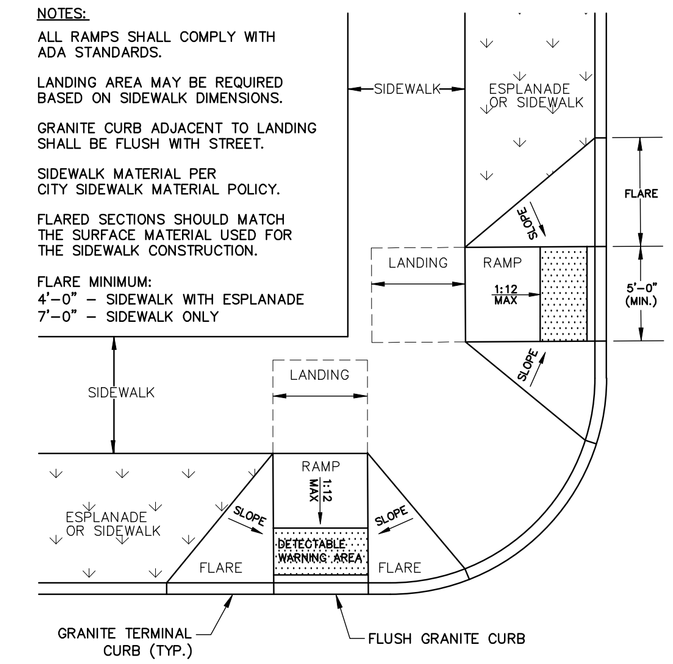

SIDEWALK RAMP AT INTERSECTION (FORE & UNION STREET)

ADA ACCESSIBLE CURB RAMPS
N.T.S.

NOTES:

1. COMPOSITE WET SET (REPLACEABLE) DETECTABLE WARNING PANELS SHALL BE AS MANUFACTURED BY ADA SOLUTIONS, INC. (WWW.ADATILE.COM), OR APPROVED EQUAL.
2. CAST IN PLACE CONCRETE SHALL MEET SPECIFICATIONS FOR MAINE D.O.T. CLASS A STRUCTURAL CONCRETE, MINIMUM COMPRESSIVE STRENGTH 4,000 PSI. THE CONCRETE SHALL BE SEALED PRIOR TO SETTING PANELS.
3. TRUNCATED DOMES SHALL BE ALIGNED IN ROWS, PARALLEL AND PERPENDICULAR TO THE PREDOMINANT DIRECTION OF TRAVEL. NO OTHER DETECTABLE WARNING DESIGN OR CONFIGURATION IS ALLOWED.
4. FOR ALL DETECTABLE WARNING PANELS, WITHIN OR ABUTTING HISTORIC DISTRICTS AND HISTORIC LANDSCAPES, "DARK GRAY" COLORED (#36118) PANELS SHALL BE USED. FOLLOW MANUFACTURER'S INSTRUCTIONS FOR INSTALLATION.
5. THE DETECTABLE WARNING PANEL SHALL HAVE ONE FULL COURSE OF PINEHALL PATHWAY PAVERS (THE CURRENT BRICK STANDARD) AROUND THE FULL PERIMETER OF THE PANEL. THIS PERIMETER COURSE SHALL BE SET USING PORTLAND MORTAR CEMENT TO CREATE A FLUSH SURFACE BETWEEN THE BRICK AND THE PANEL.
6. SIZE: THE DETECTABLE WARNING PANEL(S) SHALL EXTEND 24 INCHES MINIMUM IN THE DIRECTION OF TRAVEL AND THE FULL WIDTH OF THE CURB RAMP, LANDING, OR BLENDED TRANSITION TO THE STREET.
7. ORIENTATION: THE DETECTABLE WARNING PANEL SHALL BE LOCATED SO THAT THE EDGE NEAREST THE CURB LINE IS 6 INCHES MINIMUM AND 8 INCHES MAXIMUM FROM THE CURB LINE. THE PANEL SHALL BE ORIENTED TO THE DIRECTION OF TRAVEL AS IDENTIFIED BY THE POINT OF EGRESS.

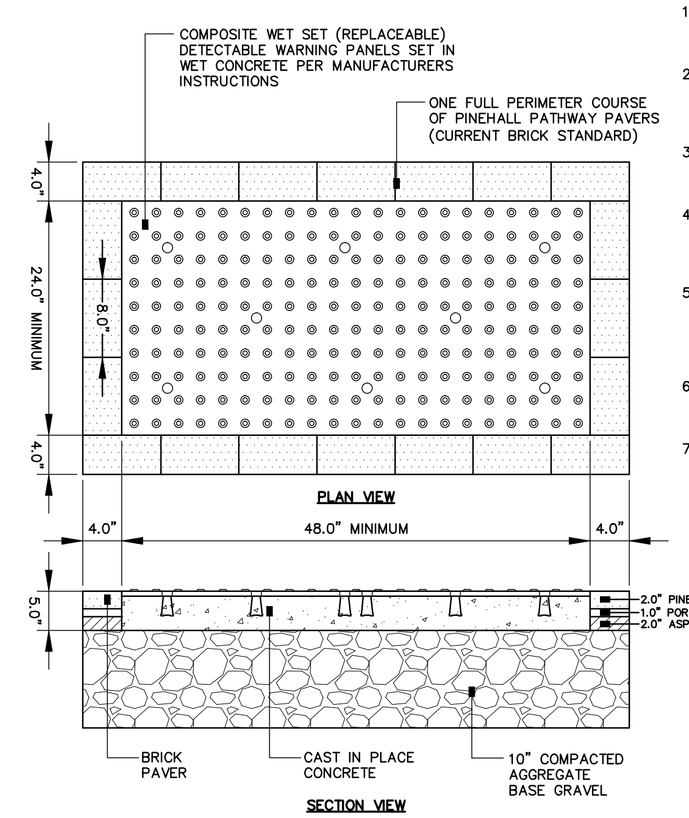

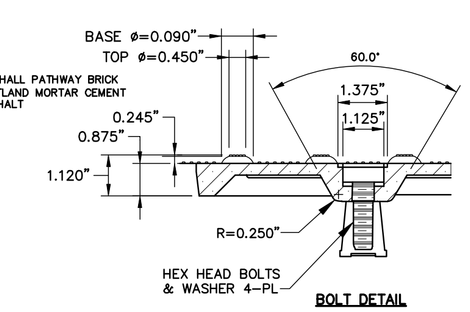

SIDEWALK RAMP DETECTABLE WARNING PANEL
(HISTORIC DISTRICTS AND LANDSCAPES)
N.T.S.

PRELIMINARY - NOT FOR CONTRUCTION

41 Hutchins Drive
Portland, Maine 04102
800.426.4262 | www.woodardcurran.com
WOODARD & CURRAN
COMMITMENT & INTEGRITY DRIVE RESULTS

THIS DOCUMENT IS THE PROPERTY OF WOODARD & CURRAN, INC. AND ITS CLIENT. REPRODUCTION OR MODIFICATION WITHOUT WRITTEN PERMISSION IS PROHIBITED.

STATE OF MAINE
DENISE CAMERON
No. 11279
LICENSED PROFESSIONAL ENGINEER
10/01/2012

REV	DESCRIPTION	DATE
1	FINAL SITE PLAN APPLICATION SUBMISSION	9/28/2012

DESIGNED BY: MDLM
DRAWN BY: JBC
CHECKED BY: DLC
2258690-000A.DWG

CIVIL DETAILS – 4

COW PLAZA HOTEL, LLC
100 COMMERCIAL STREET, SUITE 306
PORTLAND, MAINE, C/O TIM SOLEY

CANAL PLAZA HOTEL

JOB NO.: 225869.01
DATE: OCTOBER 2012
SCALE: AS NOTED
SHEET: 8 OF 9

C-303

\\portland\projects1\225869 canal 5 – fore & union hotel\deliverables\2012.10.01 final site plan application submission\PLANS\DWG\225869.01–000A.dwg, Oct 01, 2012 – 10:34am