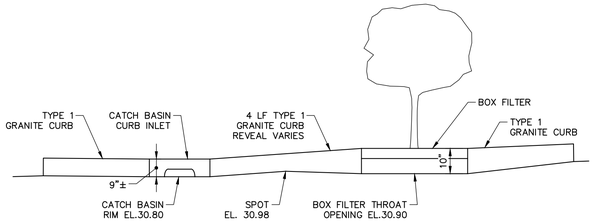

BOX FILTER GUTTER LINE DETAIL

N.T.S.

NOTE:

DETAIL REPRESENTS ELEVATION VIEW OF SERVICE DRIVEWAY GUTTER LINE AT BOX FILTER LOCATION. PRIMARY GUTTERLINE FLOW FROM UPHILL AREAS SHALL FIRST ENTER BOX FILTER UNIT. OVERFLOW DURING HIGH-INTENSITY RAINFALL EVENTS THAT PONDS OUT OF BOX FILTER THROAT SHALL CONTINUE DOWN GUTTERLINE TO CB-3.

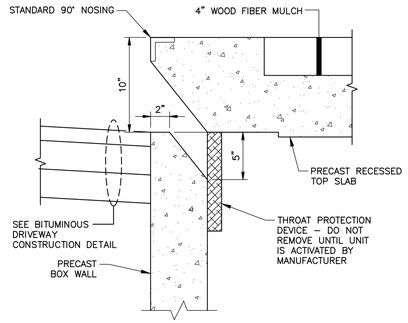

BOX FILTER THROAT OPENING DETAIL

N.T.S.

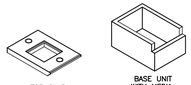

6'x4' UNDERDRAINED BOX FILTER

NOTE:

1. LISTED WEIGHTS ARE APPROXIMATE, CONFIRM WEIGHTS WITH MANUFACTURER PRIOR TO INSTALLATION.

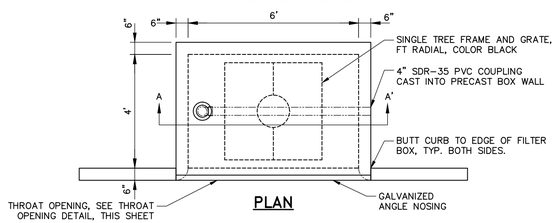

PLAN

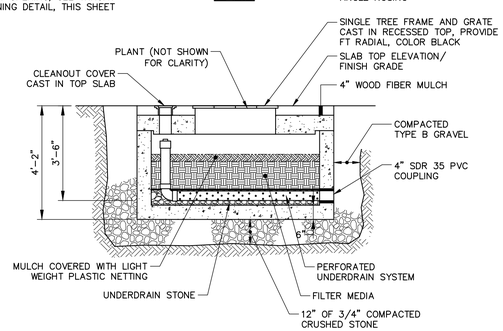

SECTION A–A'

NOTE:

1. UNDERDRAINED BOX FILTER BY FILTERRA® OR APPROVED EQUAL.
2. A LIST OF PLANT AND TREE OPTIONS PREPARED BY BOX FILTER MANUFACTURER SHALL BE PRESENTED TO THE OWNER FOR SELECTION.
3. UNDERDRAINED BOX FILTER SHALL HAVE GALVANIZED NOSING AT CURB EDGE.

BOX FILTER UNIT

N.T.S.

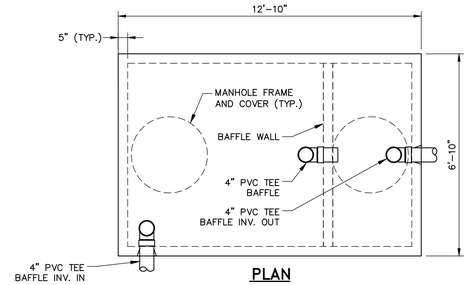

PLAN

CONCRETE SPECIFICATIONS

1. 5,000 PSI AT 28 DAYS
2. 4% – 6% ENTRAINED AIR
3. TANK PENETRATIONS ARE INTEGRALLY CAST
4. ALL JOINTS SEALED WITH BUTYL RUBBER JOINT SEALANT
5. H-20 LOADING

GREASE TRAP INFORMATION

1. TANKS SHOULD BE PUMPED AS NEEDED
2. ACCESS COVERS SHOULD HAVE RISERS TO BRING COVER ACCESS TO GRADE.

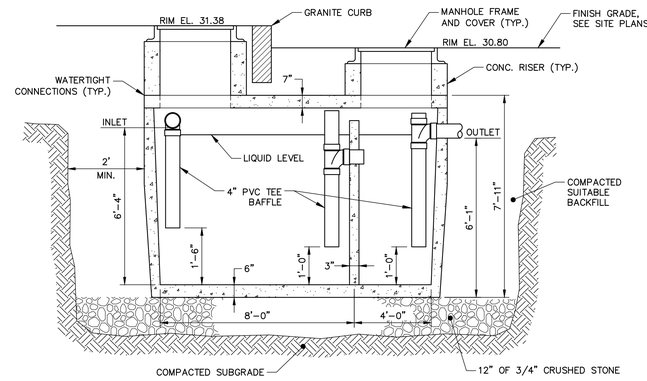

SECTION

3,000 GALLON EXTERNAL GREASE TRAP DETAIL

N.T.S.

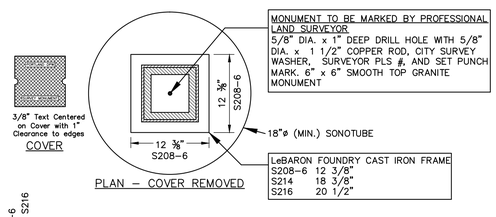

PLAN – COVER REMOVED

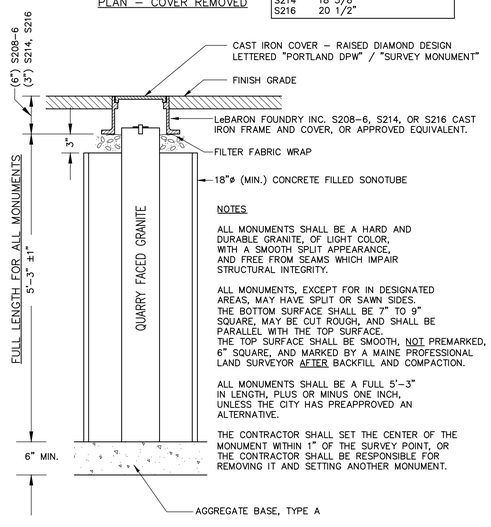

NOTES

ALL MONUMENTS SHALL BE A HARD AND DURABLE GRANITE, OF LIGHT COLOR, WITH A SMOOTH SPLIT APPEARANCE, AND FREE FROM SEAMS WHICH IMPAIR STRUCTURAL INTEGRITY.

ALL MONUMENTS, EXCEPT FOR IN DESIGNATED AREAS, MAY HAVE SPLIT OR SAWN SIDES. THE BOTTOM SURFACE SHALL BE 7" TO 9" SQUARE, MAY BE CUT ROUGH, AND SHALL BE PARALLEL WITH THE TOP SURFACE. THE TOP SURFACE SHALL BE SMOOTH, NOT PREMARKED, 6" SQUARE, AND MARKED BY A MAINE PROFESSIONAL LAND SURVEYOR AFTER BACKFILL AND COMPACTION.

ALL MONUMENTS SHALL BE A FULL 5'-3" IN LENGTH, PLUS OR MINUS ONE INCH, UNLESS THE CITY HAS PREAPPROVED AN ALTERNATIVE.

THE CONTRACTOR SHALL SET THE CENTER OF THE MONUMENT WITHIN 1" OF THE SURVEY POINT, OR THE CONTRACTOR SHALL BE RESPONSIBLE FOR REMOVING IT AND SETTING ANOTHER MONUMENT.

GRANITE STREET MONUMENT

N.T.S.

NOTE: AGGREGATE TYPES PER MDOT SECTION 304.02

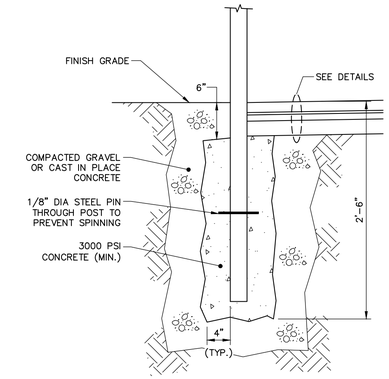

POST SPECIFICATION			
TYPE	HEIGHT ABOVE FIN. GRADE	POST DIAMATER	POST MATERIAL
STREET SIGNAGE	7'-0"	2 3/8" (O.D.)	GALV. STEEL

TYPICAL SIGN POST DETAIL

N.T.S.

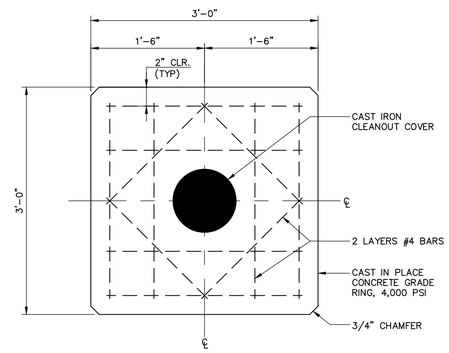

CONCRETE GRADE RING REINFORCEMENT PLAN

N.T.S.

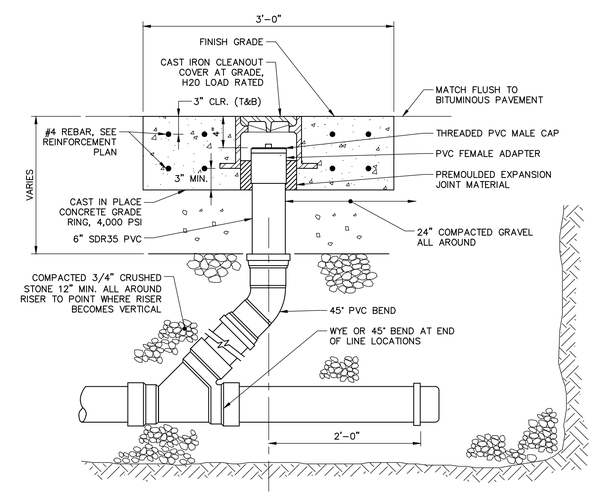

CLEANOUT DETAIL

N.T.S.

41 Hutchins Drive
Portland, Maine 04102
800.426.4262 | www.woodardcurran.com
WOODARD & CURRAN
COMMITMENT & INTEGRITY DRIVE RESULTS

THIS DOCUMENT IS THE PROPERTY OF WOODARD & CURRAN, INC. AND ITS CLIENT. REPRODUCTION OR MODIFICATION WITHOUT WRITTEN PERMISSION IS PROHIBITED.

STATE OF MAINE DENISE CAMERON No. 11279 PROFESSIONAL ENGINEER
01/25/2013

REV	DATE	DESCRIPTION	CHECKED BY: DJC
4	1/25/13	ADDENDUM 3	
3	11/16/2012	ISSUED FOR CONSTRUCTION	
2	10/19/2012	RESPONSE TO COMMENTS	
1	9/28/2012	FINAL SITE PLAN APPLICATION SUBMISSION	

DESIGNED BY: MDLM
DRAWN BY: JEC
2358901-300A.DWG

CIVIL DETAILS – 3

COW PLAZA HOTEL, LLC
100 COMMERCIAL STREET, SUITE 306
PORTLAND, MAINE, C/O TIM SOLEY

HYATT PLACE
PORTLAND – OLD PORT
433 FORE STREET
PORTLAND, ME

JOB NO.: 225869.01
DATE: NOVEMBER 2012
SCALE: AS NOTED
SHEET: 8 OF 12

C-302

\\portland\projects\225869 canal 5 – fore & union hotel\wip\Drawings\2258690l-DOOA.dwg, Jan 24, 2013 – 2:43pm