## GENERAL NOTES

1. DO NOT SCALE THE DRAWINGS:
   1.1. WRITTEN DIMENSIONS TAKE PRECEDENCE OVER GRAPHIC REPRESENTATION. DETAIL DIMENSIONS TAKE PRECEDENCE OVER PLAN DIMENSIONS.
   1.2. DIMENSIONS ON DRAWINGS ARE TO THE STRUCTURAL GRID OR FROM FINISH FACE TO FINISH FACE OF PARTITIONS, COLUMNS, ETC., UNLESS OTHERWISE NOTED OR SHOWN.ED
2. THE GENERAL CONTRACTOR IS TO VERIFY FIELD CONDITIONS PRIOR TO COMMENCEMENT OF EACH PORTION OF THE WORK. COMMENCEMENT OF WORK BY THE GENERAL CONTRACTOR WILL CONSTITUTE AN ACCEPTANCE OF SITE CONDITIONS AS PER THESE CONTRACT DOCUMENTS.ED
3. THE CONTRACT DOCUMENTS ARE COMPLEMENTARY, AND WHAT IS REQUIRED BY ONE SHALL BE AS BINDING AS IF REQUIRED BY ALL. THE CONTRACTOR SHALL COORDINATE ALL PORTIONS OF THE WORK AS DESCRIBED IN THE CONTRACT DOCUMENTS. NOTIFY THE ARCHITECT FOR RESOLUTION OF ALL DISCREPANCIES PRIOR TO CONSTRUCTION.
4. DOORS AND CASED OPENINGS INDICATED NEARBY WALL INTERSECTIONS, SHALL BE LOCATED SO THAT THE EDGE OF THE FINISH OPENING IS SIX INCHES FROM THE FACE OF THE NEARBY WALL UNLESS OTHERWISE INDICATED. ALL OTHER DOORS AND CASED OPENINGS SHALL BE CENTERED BETWEEN ADJACENT WALL INTERSECTIONS.
5. GC TO COORDINATE THE DISCONNECT OF ALL NETWORK CABLING PRIOR TO DEMOLITION WITH THE BUILDING LANDLORD AND / OR TENANT.ED
6. GENERAL CONTRACTOR SHALL BE HELD RESPONSIBLE TO ENSURE THAT ALL EQUIPMENT AND DEVICES NEW OR RE-USED MEET ALL CURRENT LANDLORD REQUIREMENTS AND CURRENT STANDARDS.
7. GENERAL CONTRACTOR SHALL EXERCISE EXTREME CARE DURING ALL PHASES OF CONSTRUCTION SO AS NOT TO DAMAGE OR DISRUPT UTILITIES WHICH MIGHT PASS THROUGH THIS SPACE TO SERVICE OTHER TENANTS. GENERAL CONTRACTOR WILL BEAR SOLE RESPONSIBILITY FOR ANY SUCH DAMAGE OR DISRUPTION.
8. BASE BUILDING CONSTRUCTION RULES & REGULATIONS SPECIFICATIONS & THE TENANT LEASE AGREEMENT SHALL GOVERN WORKMANSHIP/MATERIALS/DESIGN, EXCEPT AS THESE VARIOUS ELEMENTS WHICH COULD BE MODIFIED OR AMENDED BY THESE CONSTRUCTION DOCUMENTS (CD, HEREINAFTER). ANY NOTE OR INDICATION SHOWN OR IMPLIED WHICH DOES NOT CONFORM TO THE LETTER OR SPIRIT SO DEFINED, SHALL BE BROUGHT TO THE ATTENTION OF THE CLIENT & ARCHITECT, IN WRITING, FOR REVIEW.
9. THE GENERAL CONTRACTOR (GC, HEREINAFTER) UPON SIGNING THE OWNER/GC AGREEMENT, ACCEPTS THE THE CONSTRUCTION DOCUMENTS; INCLUDING THESE DRAWINGS THE INCLUDED NOTES & DESCRIPTIVE MATERIAL & AGREES TO EXECUTE THE NECESSARY WORK IN MANNER DESCRIBED THEREIN.
10. UPON EXAMINATION AND FAMILIARIZATION WITH THE CONSTRUCTION DOCUMENTS & PROJECT SITE, ANY DISCREPANCIES, OMISSIONS, AMBIGUITIES AND/OR CONFLICTS SHALL BE BROUGHT TO THE ATTENTION OF THE CLIENT & ARCHITECT IN WRITING, FOR REVIEW AND CORRECTION.
11. ANY ELEMENT, WHATSOEVER, REQUIRED BY BUILDING TO BE INCORPORATED IN CONSTRUCTION BUT NOT SPECIFIED IN THE CONSTRUCTION DOCUMENTS SHALL BE BROUGHT TO ATTENTION OF THE CLIENT & ARCHITECT FOR REVIEW.
12. NO MODIFICATIONS, REVISIONS, CHANGES SHALL BE UNDERTAKEN UNLESS SPECIFICALLY INSTRUCTED & APPROVED BY THE CLIENT & ARCHITECT.
13. DURING COURSE OF PROJECT, THE CLIENT & ARCHITECT SHALL MAKE EVERY EFFORT TO FULLY INFORM ALL CONCERNED PARTIES REGARDING DECISIONS AND OR ACTIONS TAKEN WHICH, IN ANY WAY, MIGHT AFFECT ANY OTHER PARTIES.
14. EXCEPT AS MAY OTHERWISE BE INDICATED, THE GC SHALL PROVIDE & PAY FOR ALL MATERIALS, LABOR, ITEMS AND SERVICES NECESSARY TO ACCOMPLISH THE WORK SET FORTH IN THIS CONSTRUCTION DOCUMENT.
15. UNLESS OTHERWISE SPECIFIED, ALL MATERIALS SHALL BE NEW, BOTH MATERIALS & WORKMANSHIP SHALL BE OF QUALITY CONSISTENT WITH INDUSTRY STANDARDS FOR A CLASS "A" INSTALLATION.
16. ANY WORK NEEDED TO BE ACCOMPLISHED ON AN OVERTIME BASIS SHALL BE PRICED AND PRESENTED AS SUCH IN BID.
17. ALL WORKMEN & SUBCONTRACTORS SHALL BE SKILLED IN THEIR TRADES.
18. ANY & ALL GOVERNING LOCAL LABOR LAWS, REGULATIONS & REQUIREMENTS AND THOSE SET AS BUILDING REQUIREMENTS SHALL BE OBSERVED & FOLLOWED AS THEY RELATE TO THIS PROJECT. ARRANGEMENTS FOR COMPLIANCE THESE REQUIREMENTS SHALL BE MADE BY GC TO PRECLUDE ANY LABOR-RELATED JOB DISPUTES & RELATED DELAYS, PROBLEMS, AND COSTS.
19. GC SHALL SUBMIT A DETAILED PROJECT SCHEDULE TO THE CLIENT & ARCHITECT AT TIME OF PRICING AND BID SUBMISSION AND A REVISED (IF NECESSARY) PROJECT SCHEDULE AT THE TIME OF PROJECT COMMENCEMENT. THE PROJECT SCHEDULE IS REQUIRED TO ADDRESS ALL TRADES, CRITICAL MILESTONE DATES AND PROJECT PHASING.
20. GC SHALL SUBMIT PROJECT COSTS AND PRICING IN A COMPLETE BREAKDOWN FORM, LISTING WORK NOT ONLY BY VARIOUS TRADES, BUT ALSO WITH MAJOR SUB CATEGORIES WITHIN EACH TRADE ITEMIZED.
21. GC SHALL BE RESPONSIBLE FOR SECURING THE CLIENT SPACE DURING ALL PHASES OF CONSTRUCTION.
22. SAFE CONSTRUCTION PRACTICES SHALL BE OBSERVED TO ASSURE WORKMEN'S SAFETY ON JOB AND THE SAFETY OF ALL PERSONNEL IMMEDIATELY OUTSIDE /ADJACENT TO THE AREA(S) OF WORK.
23. GC SHALL PRESENT PROOF OF INSURANCE COVERING IN AMOUNTS REQUIRED BY LOCAL LAW, AS STIPULATED BY BUILDING, AND AS REQUIRED BY THE CLIENT. PROOF OF INSURANCE SHALL BE SUBMITTED TO THE CLIENT AND BUILDING PRIOR TO CONSTRUCTION. CERTIFICATES, ETC., SHALL BE AVAILABLE AT JOBSITE FOR EXAMINATION ON DEMAND.
24. GC SHALL BE RESPONSIBLE FOR PROTECTING THE CLIENT DEMISED PREMISES AND ALL AREAS, CORRIDORS, STAIRS, ELEVATORS, ETC. OUTSIDE THE CLIENT SPACE, AGAINST DAMAGE DURING THE CONSTRUCTION PROCESS. ANY DAMAGE TO THESE AREAS SHALL BE CORRECTED TO SATISFACTION OF THE CLIENT AND THE BUILDING AT THE GC'S COST.
25. GC SHALL PERMIT AND FACILITATE OBSERVATION OF WORK BY BUILDING, THE CLIENT THEIR AGENTS, AND PUBLIC AUTHORITIES, AT ALL TIMES, AS REQUESTED OR NEEDED.
26. CLIENT RETAINS THE RIGHT TO LET OTHER CONTRACTORS IN CONNECTION WITH THE PROJECT WORK. GC SHALL PROPERLY COOPERATE, COORDINATE AND INTERFACE THEIR SCHEDULE WITH ANY SUCH CONTRACTOR VENDORS, ETC.
27. HVAC SYSTEM ENGINEERING/DESIGN FOR THIS PROJECT SHALL BE PROVIDED BY ENGINEERING FIRM APPROVED BY BUILDING.
28. GC SHALL BE RESPONSIBLE FOR ALL LOCAL BUILDING DEPARTMENT FILING, PERMITS, APPROVALS, ETC. PAYMENT OF ALL NECESSARY FEES AS REQUIRED BY THE ABOVE AUTHORITIES FOR JOB COMPLETION AND SIGN-OFF SHALL BE INCLUDED IN PRICING. USE OF LOCAL ARCHITECTURAL PROFESSIONAL OR EXPEDITER, IF REQUIRED, SHALL BE REVIEWED BEFOREHAND.
29. CLIENT AND ARCHITECT SHALL BE NOTIFIED OF ANY REVISIONS TO BE INCORPORATED IN CD TO COMPLY WITH RULES/REGULATIONS OF ANY AND ALL LOCAL GOVERNING AUTHORITIES HAVING JURISDICTION OVER PROJECT.
30. WHERE MORE THAN ONE REGULATION APPLIES, THE STRICTER ONE SHALL GOVERN.
31. GC SHALL BE RESPONSIBLE FOR CONFORMANCE WITH ANY APPLICABLE LOCAL BUILDING CODES AND SHALL NOT KNOWINGLY EXECUTE WORK SPECIFIED WHICH IS NOT IN CONFORMANCE.
32. GC SHALL RE-EXECUTE ANY WORK THAT FAILS TO CONFORM TO THE DRAWINGS/DETAILS AS SHOWN, AND ANY DEFECTS DUE TO FAULTY MATERIALS OR WORKMANSHIP WHICH APPEAR WITHIN A PERIOD OF ONE (1 ) YEAR FROM THE DATE OF MOVE-IN.
33. WARRANTY SHALL BE PROVIDED FOR ALL CONSTRUCTION COMPONENTS AND EQUIPMENT AND INSTALLATIONS INCLUDED IN THIS WORK FOR A MINIMUM OF ONE YEAR FROM DATE OF SUBSTANTIAL COMPLETION.
34. SHOP DRAWINGS SHALL BE SUBMITTED TO ARCHITECT IN TRIPLICATE FOR REVIEW. SHOP DRAWINGS ENHANCE THESE SPECIFICATIONS; APPROVAL OF SHOP DRAWINGS SHALL NOT RELEASE CONTRACTOR OF RESPONSIBILITY FOR WORK AS SPECIFIED.
35. CONDITION AND USE OF THE JOB SITE SHALL BE THE RESPONSIBILITY OF THE GC. JOB SITE SHALL BE MAINTAINED IN A CLEAN AND ORDERLY FASHION. DEBRIS AND TRASH FOR ALL TRADES AND CONTRACTORS UNDER GC CONTROL AND FOR THOSE UNDER DIRECT CONTRACT WITH OWNER SHALL BE REMOVED DAILY. GC SHALL COORDINATE DELIVERIES, INSPECTION, SITE VISITS FOR ALL TRADES AND CONTRACTORS AS REQUIRED.
36. FINAL CLEANING AT SUBSTANTIAL COMPLETION SHALL INCLUDE CLEANING OF ALL FINISHED WOOD AND GLASS SURFACES; DUSTING OF ALL HORIZONTAL SURFACES, VACUUMING OF ALL CARPETED AREAS AND REMOVAL OF ANY SPOTS, STAINS, SPILLS, ETC. ON ANY SURFACE, INCURRED DURING THE CONSTRUCTION PERIOD.
37. CONDITIONS FOR AIA DOCUMENT A201 AS IT MAY BE MODIFIED FOR THIS JOB; APPLY AND ARE A PART OF THIS CONTRACT.SPECIAL REQUIREMENTS: THE FOLLOWING ADDITIONAL LABOR SHALL BE PROVIDED BY GC FOR WORK TO BE DIRECTED BY OWNER TO FACILITATE OCCUPANCY:
   37.1. ELECTRICIAN LABOR - PROVIDE FOR TWO MAN-DAYS, FRIDAY NIGHT AND SATURDAY, "STANDBY" TO COORDINATE TELEPHONE AND OTHER EQUIPMENT TESTING AND INSTALLATION.
   37.2. JOB SITE CLEANUP SPECIFIED IN 14. SHALL CONTINUE BEYOND DATE OF SUBSTANTIAL COMPLETION TO MOVE-IN DAY AND SHALL INCLUDE REMOVAL OF ACCUMULATED DEBRIS RESULTING FROM WORK BY TELECOMMUNICATIONS CONTRACTORS AND OTHER VENDORS UNDER CONTRACT TO THE CLIENT.

## GENERAL NOTES (CONTINUED)

38. PRIOR TO START OF CONSTRUCTION, GC SHALL COORDINATE SCHEDULING OF MEETING WITH HIS PROJECT PERSONNEL, THE BUILDING/LANDLORD REPRESENTATIVE, AND OTHERS AS MAY BE REQUIRED, FOR REVIEW OF PROJECT SCOPE, DESIGN INTENT, CONSTRUCTION QUALITY EXPECTED, & FINAL DISCUSSION OF DRAWING/DETAILS/QUESTIONS.
39. GC SHALL BE RESPONSIBLE FOR FIELD MEASURING OF EXISTING CONDITIONS PRIOR TO START OF WORK & DURING CONSTRUCTION AS NECESSARY, TO ASSURE CONSTRUCTION ADHERENCE TO DRAWINGS.
   39.1. ALL "HOLD" DIMENSIONS SHALL BE MONITORED TO ASSURE CORRECTNESS.
   39.2. ANY DIMENSION REVISIONS OR MODIFICATIONS ARE TO BE BROUGHT TO THE ATTENTION OF ARCHITECT FOR REVIEW AND APPROVAL.
40. ALL VERTICAL DIMENSIONS SHALL BE TAKEN FROM "BENCH MARK" OR OTHER SIMILAR GUIDE ESTABLISHED PRIOR TO START OF CONSTRUCTION. HIGH POINTS, LOW POINTS, IRREGULARITIES IN FLOOR SLAB, WHICH COULD IN ANY WAY AFFECT FABRICATION OR INSTALLATION WORK OF OTHER TRADES OR VENDORS (E.G., FIXTURE CONTRACTORS), SHALL BE BROUGHT TO ATTENTION OF ARCHITECT.
41. GC SHALL BE RESPONSIBLE FOR THE REMOVAL OF ALL CONSTRUCTION DEBRIS AND FOR THE RETURN OF ANY BUILDING STANDARD COMPONENTS, IF REQUESTED, TO THE BUILDING MANAGEMENT.
42. DRYWALL JOINTS SHALL BE TAPED AND SPACKLED LEVEL. EXTERIOR CORNERS SHALL RECEIVE METAL CORNER REINFORCING BEAD AND BE SPACKLED IN CONVENTIONAL MANNER. NO HORIZONTAL DRYWALL JOINTS SHALL BE ACCEPTED UNLESS APPROVED. BUTTED & UNTAPED DRYWALL JOINTS ARE NOT ACCEPTABLE. FULL HEIGHT GYPSUM BOARD SHEETS SHALL BE USED THROUGHOUT FOR FULL HEIGHT CONSTRUCTION.
   42.1. ALL NEW DRYWALL CONSTRUCTION SHALL BE PROPERLY PREPARED TO RECEIVE SPECIFIED FINISH MATERIAL'S) IN MANNER FULLY ACCEPTABLE TO THE CLIENT & ARCHITECT. DRYWALL CONSTRUCTION VISIBLE TO THE PUBLIC, AND SCHEDULED TO BE PAINTED, SHALL RECEIVE A LEVEL "5" FINISH.
   42.2. TAPED JOINTS, CORNERS, "DIMPLES" OR SCREW HEADS SHALL BE SPECKLED SMOOTH & LEVEL WITH ADJACENT GYPSUM BOARD. BULGING OR UNEVEN FINISHED DRYWALL WILL NOT BE ACCEPTED.
43. ALL EXISTING HOLES/CRACKS IN SLAB & THOSE RESULTING FROM THE CONSTRUCTION PROCESS SHALL BE FILLED/REPAIRED & THE SURFACE PATCHED SMOOTH & LEVEL WITH ADJACENT FLOOR SURFACE.
44. ALL NECESSARY WOOD BLOCKING/GROUNDS, ETC, ARE TO BE SUPPLIED AS FACTORY TREATED FIREPROOFED ELEMENTS. GC SHALL COORDINATE SETTING/PLACEMENT OF THESE ELEMENTS AS REQUIRED BY LOCAL CODE/BUILDING OR SURROUNDING CONSTRUCTION CONDITIONS. WHEREVER POSSIBLE, GC SHALL FURNISH & INSTALL CONTINUOUS 3" H X 18 GA MIN. METAL STRAPS, ESPECIALLY WITHIN WALL CAVITY.
   44.1. GROUNDS/BLOCKING MAY NOT BE WHOLLY SHOWN ON DRAWINGS & GOOD CONSTRUCTION PRACTICE SHALL GOVERN.
   44.2. GC TO PAY PARTICULAR ATTENTION TO ALL LOCATIONS OF DRYWALL PARTITION CONSTRUCTION THAT ABUT OR ARE TO RECEIVE MILLWORK OR CABINETWORK CONSTRUCTION. INTERNAL WOOD BLOCKING SHALL BE SUPPLIED FOR STURDY ANCHORAGE AT INTERSECTIONS OF WOOD/GLASS BORROWED LIGHT PARTITIONS AND ADJACENT DRYWALL CONSTRUCTION, UNIVERSALLY.
   44.3. BLOCKING FOR ALL MILLWORK INSTALLATIONS, BUILT-IN FURNITURE, DRAPERY TRACKS, PRESENTATION BOARDS, ETC. SHALL BE PROVIDED BY GC. REFER TO FURNITURE PLAN AND FINISH PLAN FOR COMPLETE SCOPE. REFER TO MECHANICAL PLAN FOR WALL MOUNTED HVAC EQUIPMENT REQUIREMENTS IN TELEPHONE EQUIPMENT ROOM OR AREA.
45. GC SHALL PROVIDE GENERAL CARPENTRY AS REQUIRED FOR WORK WHICH MAY NOT FALL INTO JURISDICTION OF A SPECIFIC TRADE, BUT IS REQUIRED FOR PROPER JOB EXECUTION & COMPLETION OF CONSTRUCTION.
46. INSTALL ALL PLUMBING NECESSARY FOR THE INDICATED PLUMBING FIXTURES AND APPURTENANCES. REFER TO PLUMBING ENGINEERING FOR PLUMBING REQUIREMENTS.
47. ANY ACCESS PANELS REQUIRED SHALL BE APPROVED AS TO SPECIFIC SIZE, LOCATION, FINISH, ETC., BY ARCHITECT. WHEREVER POSSIBLE, GC SHALL USE GRFC TAPE IN TYPE ACCESS PANEL.
48. GC, SUBCONTRACTORS, AND ALL VENDORS ARE TO VERIFY ALL CLEARANCES (CORRIDORS, STAIRS, ELEVATORS, ETC.) REQUIRED FOR DELIVERIES, PASSAGE OF ALL JOB MATERIALS/EQUIPMENT OR PROVIDE OTHER MEANS TO ENSURE THE FIT OUT OF THE PROJECT AS SPECIFIED.
   48.1. GC SHALL SCHEDULE FOR & INCLUDE COSTS/FEES NECESSARY FOR USE OF BUILDING ELEVATOR OR ANY SPECIAL CARTAGE, RIGGING, HOISTING, DELIVERIES, TRANSPORTATION, ETC. CONNECTED WITH CONTRACT WORK; INCLUDING CLIENT VENDORS OR SUBCONTRACTORS.
49. EXISTING GYPSUM BOARD SHEATHING, INCLUDING CORE & PERIMETER COLUMNS & WALLS SHALL BE PATCHED, SPACKLED, AND FINISHED AS REQUIRED, IF DAMAGED IN ANY MANNER DURING CONSTRUCTION, TO SATISFACTION OF THE CLIENT, THE LANDLORD AND ARCHITECT.
50. HARDWARE SHALL BE PROVIDED BY GC AS SPECIFIED. SEE MILLWORK DETAILS AND NOTES FOR SCOPE OF WOODWORKING AND HARDWARE.
51. ALL DOOR HARDWARE FOR NEW DOORS AND EXISTING RETROFITTED DOORS SHALL BE MASTERED, SUB-MASTERED AND INDIVIDUALLY KEYED PER BUILDING STANDARDS AND CLIENT STANDARDS.
52. SOUND ATTENUATION BLANKET SHALL BE PROVIDED AT NEW DEMISING WALLS, EQUIPMENT ROOMS, TELEPHONE ROOMS, CONFERENCE ROOMS WALLS AND CEILINGS, OFFICES WALLS AND CEILINGS, TOILET ROOMS WALLS AND CEILINGS.
53. PROVIDE GREENBOARD IN ALL "WET" AREAS, I.E., TOILET ROOMS AND PANTRY.
54. PROVIDE BRUSH APPLIED WATERPROOF MEMBRANE ON FLOOR OF ALL "WET" AREAS AND UP TO 24" MINIMUM ON WALLS.

## SAFETY PLAN NOTES

1. GENERAL:
   1.1. ALL WORK TO BE DONE IN ACCORDANCE WITH THE APPLICABLE BUILDING CODE AND REGULATIONS OF ALL OTHER AGENCIES HAVING JURISDICTION OVER THE PROJECT.
2. STRUCTURAL:
   2.1. CONTRACTOR TO PROVIDE ADEQUATE TEMPORARY BRACING AND SHORING WHEREVER ANY STRUCTURAL WORK IS INVOLVED.
3. ALL DEMOLITION OPERATIONS, REPAIR OPERATIONS, AND ALTERATION OPERATIONS TO BE DONE IN ACCORDANCE WITH THE APPLICABLE BUILDING CODE, AND CONTRACT DOCUMENTS.
4. MEANS OF EGRESS:
   4.1. ALL EXISTING MEANS OF EGRESS FOR TENANTS OF THE BUILDING, TO BE MAINTAINED CLEAR AND FREE OF ANY AND ALL OBSTRUCTIONS.
5. FIRE SAFETY:
   5.1. ALL BUILDING MATERIALS STORED AT CONSTRUCTION AREA ARE TO BE SECURED IN A LOCKED AREA. ACCESS TO SUCH AREAS TO BE CONTROLLED BY GENERAL CONTRACTOR.
   5.2. ALL MATERIALS TO BE STORED IN AN ORDERLY FASHION.
   5.3. ALL FLAMMABLE MATERIALS TO BE KEPT TIGHTLY SEALED IN THEIR MANUFACTURER'S CONTAINERS, IN ACCORDANCE WITH THE MANUFACTURER'S RECOMMENDATIONS.
   5.4. ALL ELECTRICAL POWER IN THE CONSTRUCTION AREA TO BE SHUT-OFF AFTER WORKING HOURS.
   5.5. CONTRACTOR IS AT ALL TIMES TO ENSURE THERE IS NO LEAKAGE OF NATURAL GAS IN THE BUILDING,OR ANY FLAMMABLE GAS USED IN CONSTRUCTION.
6. DUST CONTROL:
   6.1. DEBRIS, DIRT AND DUST TO BE KEPT TO A MINIMUM, AND BE CONFINED TO THE IMMEDIATE CONSTRUCTION AREA. DEBRIS, DIRT, AND DUST IS TO BE CLEANED UP AND CLEARED FROM CONSTRUCTION AREA PERIODICALLY TO AVOID ANY EXCESSIVE ACCUMULATION.
   6.2. CONTRACTOR TO ISOLATE CONSTRUCTION AREA FROM OCCUPIED BUILDING AREAS BY MEANS OF TEMPORARY PARTITIONS OR HEAVY WEIGHT DROP CLOTHS.
7. NOISE AFTER HOURS:
   7.1. CONSTRUCTION OPERATIONS WILL BE CONFINED TO REGULAR WORKING HOURS AS MANDATED, OR OTHERWISE AGREED TO BY THE LANDLORD.
   7.2. CONTRACTOR TO OBTAIN THE WRITTEN CONSENT OF ALL PARTIES AFFECTED BY HIS WORKING DURING OTHER THAN REGULAR HOURS.
   7.3. CONSTRUCTION OPERATION WILL NOT INVOLVE INTERRUPTION OF HEATING, WATER, OR ELECTRICAL SERVICES TO OTHER TENANTS OF THE BUILDING.

## COORDINATION MEETINGS

1. VERIFY THAT UTILITY REQUIREMENTS AND CHARACTERISTICS OF OPERATING EQUIPMENT ARE COMPATIBLE WITH BUILDING UTILITIES. COORDINATE WORK OF VARIOUS SECTIONS HAVING INTERDEPENDENT RESPONSIBILITIES FOR INSTALLING, CONNECTING TO, AND PLACING IN SERVICE, SUCH EQUIPMENT.
2. COORDINATE SPACE REQUIREMENTS AND INSTALLATION OF MECHANICAL AND ELECTRICAL WORK WHICH ARE INDICATED DIAGRAMMATICALLY ON DRAWINGS. FOLLOW ROUTING SHOWN FOR PIPES, DUCTS, AND CONDUIT, AS CLOSELY AS PRACTICABLE. PLACE RUNS PARALLEL WITH LINE OF BUILDING. UTILIZE SPACES EFFICIENTLY TO MAXIMIZE ACCESSIBILITY FOR OTHER INSTALLATIONS, FOR MAINTENANCE, AND FOR REPAIR.
3. IN FINISHED AREAS EXCEPT AS OTHERWISE INDICATED CONCEAL PIPES, DUCTS, AND WIRING WITHIN THE CONSTRUCTION. COORDINATE LOCATIONS OF FIXTURES AND OUTLETS WITH FINISH ELEMENTS.
4. AFTER OWNER OCCUPANCY OF PREMISES, ACCESS TO SPACE FOR CORRECTION OF DEFECTIVE WORK AND WORK NOT IN ACCORDANCE WITH CONTRACT DOCUMENTS (PUNCH LIST ITEMS), SHALL BE CONDUCTED AT TIMES OTHER THAN REGULAR WORKING HOURS UNLESS OTHERWISE CONSENTED TO BY OWNER.
5. PRE-CONSTRUCTION MEETING
   5.1. A PRE-CONSTRUCTION MEETING WILL BE SCHEDULED AT THE PROJECT SITE PRIOR TO CONTRACTOR OCCUPANCY.
   5.2. ATTENDANCE REQUIRED: AUTHORITY HAVING JURISDICTION, LANDLORD, OWNER, ARCHITECT, CONTRACTOR AND CONTRACTORS SUPERINTENDENT.
   5.3. AGENDA:
      5.3.1. USE OF PREMISES BY OWNER AND CONTRACTOR
      5.3.2. SECURITY
      5.3.3. TEMPORARY PROTECTION AND SAFETY
      5.3.4. DUST AND NOISE PROTECTION
      5.3.5. STAGING AREA, DELIVERY AND STORAGE OF MATERIALS
      5.3.6. SCHEDULES AND PHASING OF THE WORK
      5.3.7. CONTRACTOR PARKING
      5.3.8. WORK HOURS
      5.3.9. INSPECTION AND CERTIFICATE OF OCCUPANCY PROCEDURES
      5.3.10. ANY SPECIFIC REQUIREMENTS BY AUTHORITY HAVING JURISDICTION, LANDLORD OR OWNER.
   5.4. CONTRACTOR SHALL RECORD MINUTES AND DISTRIBUTE COPIES WITHIN TWO BUSINESS DAYS AFTER MEETING TO PARTICIPANTS, WITH ONE COPY TO THE AUTHORITY HAVING JURISDICTION, LANDLORD OWNER, ARCHITECT, ALL OTHER PARTICIPANTS AND THOSE AFFECTED BY DECISIONS MADE.
6. SITE MOBILIZATION MEETING
   6.1. ARCHITECT, CONTRACTOR, AND OWNER WILL SCHEDULE A MEETING AT THE PROJECT SITE PRIOR TO CONTRACTOR'S OCCUPANCY.
   6.2. ATTENDANCE REQUIRED: OWNER, ARCHITECT, SPECIAL CONSULTANTS, CONTRACTOR, CONTRACTOR'S SUPERINTENDENT, AND MAJOR SUBCONTRACTORS.
   6.3. AGENDA:
      6.3.1. USE OF PREMISES BY OWNER AND CONTRACTOR
      6.3.2. OWNER'S REQUIREMENTS
      6.3.3. CONSTRUCTION FACILITIES AND CONTROLS PROVIDED BY OWNER
      6.3.4. TEMPORARY FACILITIES PROVIDED BY OWNER.
      6.3.5. SECURITY AND HOUSEKEEPING PROCEDURES
      6.3.6. SCHEDULES
      6.3.7. PROCEDURES FOR TESTING
      6.3.8. PROCEDURES FOR MAINTAINING RECORD DOCUMENTS
      6.3.9. REQUIREMENTS FOR STARTUP OF EQUIPMENT
      6.3.10. INSPECTION AND ACCEPTANCE OF EQUIPMENT PUT INTO SERVICE DURING CONSTRUCTION PERIOD
   6.4. CONTRACTOR SHALL RECORD MINUTES AND DISTRIBUTE COPIES WITHIN TWO BUSINESS DAYS AFTER MEETING TO PARTICIPANTS, WITH ONE COPY TO OWNER, ARCHITECT, OTHER PARTICIPANTS, AND THOSE AFFECTED BY DECISIONS MADE.
7. PROGRESS MEETINGS
   7.1. CONTRACTOR SHALL SCHEDULE AND ADMINISTER MEETINGS THROUGHOUT PROGRESS OF THE WORK AT MAXIMUM WEEKLY INTERVALS.
   7.2. CONTRACTOR SHALL MAKE ARRANGEMENTS FOR MEETING, PREPARE AGENDA WITH COPIES FOR PARTICIPANTS, PRESIDE AT MEETINGS.
   7.3. ATTENDANCE REQUIRED: JOB SUPERINTENDENT, MAJOR SUBCONTRACTORS AND SUPPLIERS, OWNER, ARCHITECT, AND CONSULTANTS APPROPRIATE TO AGENDA TOPICS FOR EACH MEETING.
   7.4. AGENDA:
      7.4.1. REVIEW MINUTES OF PREVIOUS MEETING
      7.4.2. REVIEW PROGRESS OF WORK
      7.4.3. FIELD OBSERVATIONS, PROBLEMS, AND DECISIONS
      7.4.4. IDENTIFICATION OF PROBLEMS WHICH IMPEDE PLANNED PROGRESS
      7.4.5. REVIEW OF SUBMITTALS SCHEDULE AND STATUS OF SUBMITTALS
      7.4.6. REVIEW OF OFF-SITE FABRICATION AND DELIVERY SCHEDULES
      7.4.7. MAINTENANCE OF PROGRESS SCHEDULE
      7.4.8. CORRECTIVE MEASURES TO REGAIN PROJECTED SCHEDULES
      7.4.9. PLANNED PROGRESS DURING SUCCEEDING WORK STANDARDS
      7.4.10. COORDINATION OF PROJECTED PROGRESS
      7.4.11. MAINTENANCE OF QUALITY AND WORK STANDARDS
      7.4.12. EFFECT OF PROPOSED CHANGES ON PROGRESS SCHEDULE AND COORDINATION
      7.4.13. OTHER BUSINESS RELATING TO WORK
   7.5. CONTRACTOR SHALL RECORD MINUTES AND DISTRIBUTE COPIES WITHIN TWO BUSINESS DAYS AFTER MEETING TO PARTICIPANTS, WITH ONE COPY TO ARCHITECT, OWNER, PARTICIPANTS, AND THOSE AFFECTED BY DECISIONS MADE.
8. PRE-INSTALLATION MEETING
   8.1. WHEN REQUIRED IN INDIVIDUAL SPECIFICATION SECTIONS OR DETERMINED BY BUILDING MANAGEMENT, CONVENE A PRE-INSTALLATION MEETING AT WORK SITE PRIOR TO COMMENCING WORK OF THE SECTION
   8.2. REQUIRE ATTENDANCE OF PARTIES DIRECTLY AFFECTING, OR AFFECTED BY, WORK OF THE SPECIFIC SECTION.
   8.3. NOTIFY ARCHITECT FOUR BUSINESS DAYS IN ADVANCE OF MEETING DATE
   8.4. CONTRACTOR SHALL PREPARE AGENDA AND PRESIDE AT MEETING:
      8.4.1. REVIEW CONDITIONS OF INSTALLATION, PREPARATION AND INSTALLATION PROCEDURES
      8.4.2. REVIEW COORDINATION WITH RELATED WORK
   8.5. CONTRACTOR SHALL RECORD MINUTES AND DISTRIBUTE COPIES WITHIN TWO BUSINESS AFTER MEETING TO PARTICIPANTS, WITH ONE COPY TO ARCHITECT, OWNER, PARTICIPANTS, AND THOSE AFFECTED BY DECISIONS MADE.

## PROJECT RECORD DOCUMENTS

1. THROUGHOUT PROGRESS OF THE WORK OF THIS CONTRACT, MAINTAIN AN ACCURATE RECORD OF ALL CHANGES IN THE CONTRACT DOCUMENTS.
2. UPON COMPLETION OF THE WORK OF THIS CONTRACT, THE RECORDED CHANGES TO A SET OF RECORD DOCUMENTS.
3. THOROUGHLY COORDINATE ALL CHANGES WITHIN THE RECORD DOCUMENTS, MAKING ADEQUATE AND PROPER ENTRIES ON EACH PAGE OF SPECIFICATIONS AND EACH SHEET OF DRAWINGS AND OTHER DOCUMENTS WHERE SUCH ENTRY IS REQUIRED TO PROPERLY SHOW CHANGE.
4. ACCURACY OF RECORDS SHALL BE SUCH THAT FUTURE SEARCH FOR ITEMS SHOWN IN THE CONTRACT DOCUMENTS MAY REASONABLY RELY ON INFORMATION OBTAINED FROM THE ACCEPTED RECORD DOCUMENTS
5. PRIOR TO SUBMITTING REQUEST FOR FINAL PAYMENT, SUBMIT THE FINAL RECORD DOCUMENTS TO THE ARCHITECT TO SECURE THE ARCHITECT'S ACCEPTANCE.

## CONTRACT CLOSEOUT

1. PROVIDE AN ORDERLY AND EFFICIENT TRANSFER OF THE COMPLETED WORK TO THE OWNER IN ACCORDANCE WITH THE CONTRACT DOCUMENT REQUIREMENTS INCLUDING BUT NOT LIMITED TO THE GENERAL CONDITIONS, SUPPLEMENTARY CONDITIONS AND DIVISION 1 OF THIS SPECIFICATIONS
2. QUALITY ASSURANCE
   2.1. PRIOR TO REQUESTING INSPECTION, USE ADEQUATE MEANS TO ASSURE THAT THE WORK IS COMPLETED IN ACCORDANCE WITH THE SPECIFIED REQUIREMENTS AND IS READY FOR REQUESTED INSPECTION
   2.2. PRIOR TO FINAL INSPECTION AND OCCUPANCY VERIFY THAT ALL PENETRATIONS, INCLUDING EXISTING, FIRE RATED FLOORS/WALLS ARE PROPERLY SEALED.
3. SUBSTANTIAL COMPLETION:
   3.1. SUBSTANTIAL COMPLETION OF THE WORK, OR DESIGNATED PORTION THEREOF, IS THE DATE CERTIFIED BY THE ARCHITECT WHEN CONSTRUCTION IS SUFFICIENTLY COMPLETE IN ACCORDANCE WITH THE CONTRACT DOCUMENTS.
4. FINAL COMPLETION:
   4.1. UPON RECEIPT OF WRITTEN NOTICE FROM THE CONTRACTOR THAT THE WORK IS READY FOR FINAL INSPECTION, ACCEPTANCE, AND UPON RECEIPT OF A FINAL APPLICATION FOR PAYMENT, THE ARCHITECT WILL PROMPTLY MAKE SUCH INSPECTION.
   4.2. THE CONTRACTOR SHALL CERTIFY THAT:
      4.2.1. CONTRACT DOCUMENTS HAVE BEEN REVIEWED.
      4.2.2. WORK HAS BEEN INSPECTED FOR COMPLIANCE AND IN ACCORDANCE WITH THE CONTRACT DOCUMENTS.
      4.2.3. EQUIPMENT AND SYSTEMS HAVE BEEN TESTED AS REQUIRED, AND ARE OPERATIONAL.
5. WORK IS COMPLETED AND READY FOR FINAL INSPECTIONCLOSE-OUT SUBMITTALS INCLUDE BUT NOT LIMITED TO:
   5.1. "AS-BUILT" RECORD SETS AND ASSOCIATED DISKS
   5.2. OPERATION AND MAINTENANCE DATA
   5.3. WARRANTIES AND BONDS
   5.4. KEYS AND KEYING SCHEDULE
   5.5. SPARE PARTS AND MATERIAL EXTRA STOCK
   5.6. EVIDENCE OF COMPLIANCE WITH GOVERNMENTAL AGENCIES HAVING JURISDICTION INCLUDING, BUT NOT LIMITED TO-
      5.6.1. CERTIFICATES OF INSPECTION
      5.6.2. CERTIFICATES OF OCCUPANCY
   5.7. CERTIFICATES OF INSURANCE FOR PRODUCTS AND COMPLETED OPERATIONS.
   5.8. LIST OF SUBCONTRACTORS, SERVICE ORGANIZATIONS AND PRINCIPAL VENDORS, INCLUDING NAMES ADDRESSES AND TELEPHONE NUMBERS WHERE THEY CAN BE REACHED FOR EMERGENCY SERVICE AT ALL TIMES INCLUDING NIGHTS, WEEKENDS AND HOLIDAYS.

## MILLWORK & CABINETRY NOTES

1. ALL FINISHED MILLWORK, WOODWORKING, AND CABINETRY INCLUDING WOOD DOORS, JAMBS, FRAMES, WINDOW FRAMES, TRIM, COUNTERS, PANELS, MOLDINGS, CABINET REVEALS, BLOCKING AND INSTALLATION OF RELATED HARDWARE IS TO BE COMPLETED BY MILLWORK CONTRACTOR (MC) AS SUBCONTRACTOR TO GC UNLESS OTHERWISE NOTED.
2. SCHEDULING AND COORDINATION WITH OTHER TRADES WILL BE THE RESPONSIBILITY OF THE GC WHETHER MILLWORK IS INCLUDED IN HIS WORK OR NOT.
3. FURNITURE AS SHOWN ON FURNITURE PLAN IS BY OTHERS. MC REFER TO FURNITURE PLAN FOR SCOPE OF WORK RELATED TO FURNITURE INSTALLATION (FILE PLATFORMS, REVEALS, ETC.)
4. DETAILING OF MILLWORK SHALL BE AS SHOWN. MC SHALL SUBMIT SHOP DRAWINGS FOR REVIEW TO VERIFY CONFORMANCE TO SPECS.
5. FIELD MEASUREMENTS SHALL BE VERIFIED BY MC AS REQUIRED. CLIENT WILL NOT VERIFY FIELD CONDITIONS AND DIMENSIONS ON SHOP DRAWINGS.
6. COORDINATION OF MILLWORK WITH EXISTING AND NEW CONSTRUCTION AND WITH MECHANICAL, FURNITURE AND OTHER RELATED ELEMENTS SHALL BE THE RESPONSIBILITY OF THE GC.
7. MATERIALS SHALL BE AS SPECIFIED AND OF HIGHEST QUALITY BY ACCEPTED COMMERCIAL STANDARDS.
8. SUITABLE MOISTURE RESISTANT/WATERPROOF SUBSTRATE SHALL BE USED FOR PLASTIC LAMINATE PIECES TO PREVENT FAILURE DUE TO MOISTURE.
9. SUBSTRATE FOR VENEERED AND LAMINATED PANELS SHALL BE FURNITURE GRADE PLYWOOD FOR ALL HORIZONTAL SURFACES AND SHELVES. (HIGH DENSITY PARTICLE BOARD MAY BE USED FOR VERTICAL ELEMENTS.)
10. EDGES OF VENEERED PANELS SHALL MATCH SURFACE. EDGES LESS THAN 1" SHALL BE HARDWOOD.
11. WOOD VENEERS SHALL BE SINGLE SHEET 1/20" THICK MIN. WITH NO SPLICES (EXCEPT AS CALLED FOR). JOINTS AND GRAIN DIRECTION SHALL BE INDICATED ON SHOP DRAWINGS. ADJACENT JOINTED VENEERS SHALL BE BOOK MATCHED UNLESS OTHERWISE NOTED.
12. ALL VENEERS SHALL BE STAINED TO MATCH CONTROL SAMPLE.
13. FINISH SAMPLES SHALL BE SUBMITTED FOR APPROVAL PRIOR TO FABRICATION.
14. PLASTIC LAMINATE SHALL BE SHOP APPLIED ACCORDING TO MANUFACTURERS SPECIFICATIONS.
15. PLASTIC LAMINATE SHALL BE ONE SINGLE SHEET ON ANY ONE SURFACE. JOINTS, IF REQUIRED, SHALL BE INDICATED ON SHOP DRAWINGS FOR APPROVAL. ALL JOINTS SHALL BE TIGHT WITH NO SEPARATION.
16. WOOD DOOR AND WINDOW FRAMES, ETC., SHALL BE SECURED TO SOLID WOOD GROUNDS/BLOCKING PROVIDED AS PART OF CEILING AND WALL CONSTRUCTION.
17. DIMENSIONS FOR WOOD FRAMES SHALL BE VERIFIED BY FIELD MC AFTER RELATED ADJACENT CONSTRUCTION IS COMPLETE.
18. WOOD REVEAL FILLER STRIPS SHALL BE PROVIDED BY MC FOR ALL BUILT-IN CABINETS. FILLERS SHALL BE OF CLOSE GRAINED STOCK, FILLED, SANDED AND PAINTED (SEMI-GLOSS) TO MATCH ADJACENT CONSTRUCTION; EXCEPT AS NOTED. FILLERS SHALL BE INCLUDED FOR ALL BUILT-IN FILES, STORAGE CABINETS, BOOKCASES, ETC.
19. INSTALLATION OF REVEAL STRIPS SHALL BE EXECUTED IN A NEAT, WORKMANLIKE MANNER WITHOUT DAMAGE TO ADJACENT CABINETS OR SURFACES. PIECES SHALL BE SCRIBED TO FIT AND FASTENED TO BLOCKING.
20. GLAZING FOR WOOD/GLASS PARTITIONS SHALL BE CLEAR, 3/8" THICK TEMPERED, INSTALLED AS SHOWN USING FRICTION-FIT BLACK GASKET AND OPEN JOINTS. GLASS PANELS SHALL BE FREE OF DISTORTION. A DEFLECTION OF MORE THAN 1/8" RELATIVE TO ADJACENT PANELS WILL BE EJECTED. ALL JOINTS 1/8" MAXIMUM.
   20.1. IF SAFETY GLASS IS REQUIRED BY CODE, GLAZING SHALL BE AS MFG. BY PPG OR APPROVED EQUAL.
   20.2. GLASS PANEL SIZES AND JOINTS SHALL BE APPROVED BY CLIENT AND ARCHITECT.
21. DOOR HARDWARE SHALL BE FURNISHED AND INSTALLED BY G.C.
22. HARDWARE WILL BE SPECIFIED BY ARCHITECT. SPECIFICATIONS SHOULD BE THE BETTER OF BUILDING STANDARD OR EQUIVALENT IN QUALITY AND FUNCTION TO THE FOLLOWING:
23. WOOD DOORS WHEN SPECIFIED FOR PRIVATE OFFICES. DOORS SHALL BE 1 3/4" THICK PARTICLE BOARD CORE WITH HARDWOOD VENEER FACE AND MATCHING HARDWOOD STYLES AND EDGES. FACTORY FINISHED AS SPECIFIED. WARRANTY BY MFR. MINIMUM 10 YEARS.
24. WOOD ENTRY DOORS - WHEN SPECIFIED, SHALL BE 1 3/4" MINERAL CORE (RATING AS REQUIRED) WITH TYPE 11 WATER RESISTANT HARDWOOD VENEER AND MATCHING STILES AND EDGES. CUSTOM HARDWOOD MOLDINGS APPLIED AS DETAILED. FACTORY FINISHED AS SPECIFIED.
25. WOOD ENTRY DOORS - WHEN SPECIFIED AS 20 MINUTE FIRE RATED OR LESS SHALL BE 1-3/4".
26. GLASS ENTRY DOORS - WHEN SPECIFIED, SHALL BE 1/2" CLEAR TEMPERED GLASS, MIN.
27. METAL SHELVING SUPPLIER IS TO VERIFY ALL DIMENSIONS BEFORE DELIVERY. INSTALLATIONS OF NEW METAL SHELVING IS BY G.C. AS NOTED. SHELVING SHALL BE LEVEL, STABLE AND SECURE; TOP BRACING TO BE SUPPLIED AS REQUIRED. METAL SHELVING UNITS SHALL HAVE CROSS BRACING, SHALL BE SECURED TO METAL STUDS, AT FLOOR SLAB AND BRACED TO STRUCTURE ABOVE AS REQUIRED.
28. INTERIOR OF ALL MILLWORK CABINETS TO BE WHITE PLASTIC LAMINATE.

## TYPICAL ACOUSTIC CEILING ASSEMBLY

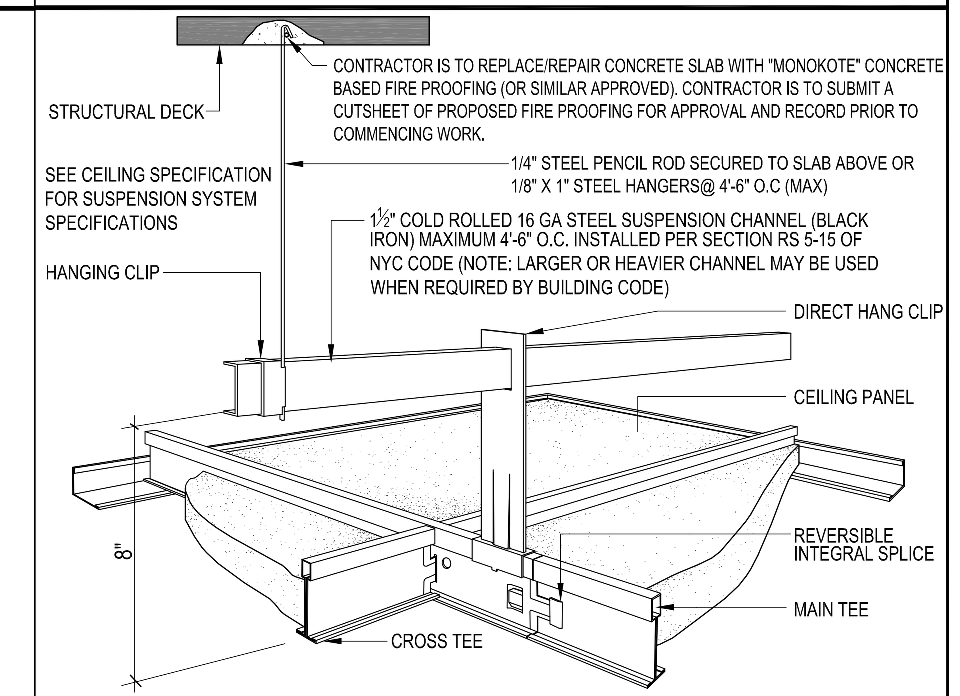


## TYPICAL GYP. BD. CEILING ASSEMBLY

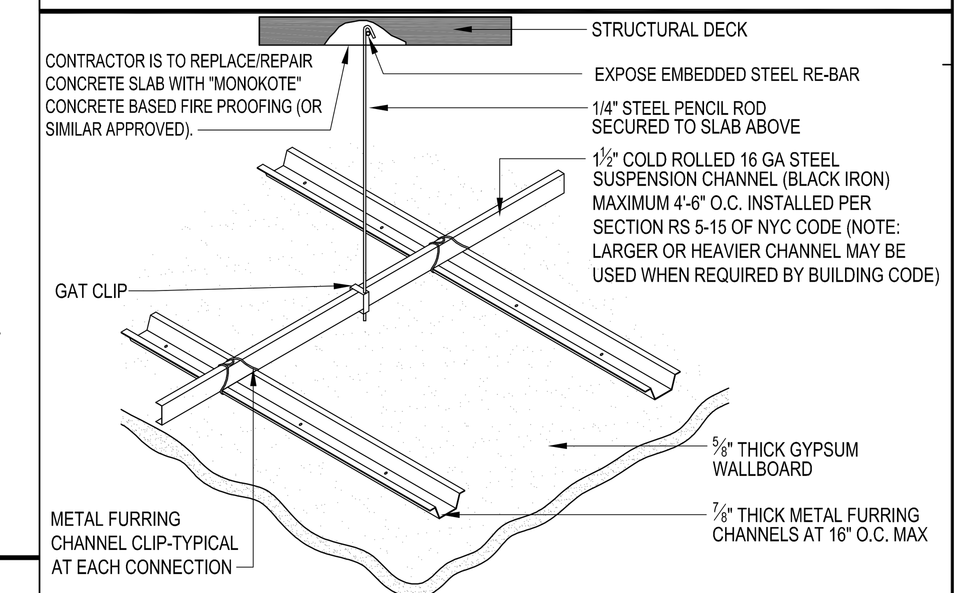


## REFLECTED CEILING NOTES

1. REFER TO SHEET G-001 FOR ADDITIONAL NOTES.
2. ALL INTERFACING SUBCONTRACTORS TO FAMILIARIZE THEMSELVES WITH THE BUILDING RULES AND REGULATIONS. GC/CM TO COORDINATE WITH LANDLORD/BUILDING MANAGEMENT FOR ALL BUILDING REQUIREMENTS ON SITE.
3. GC/CM AND IT'S SUBCONTRACTORS TO REVIEW ARCHITECTS, ENGINEERS DRAWINGS PRIOR TO THIS SUBMISSION. ALL DISCREPANCIES, ERRORS AND OMISSIONS TO BE BROUGHT TO THE ATTENTION OF THE ARCHITECT AND ENGINEER FOR CLARIFICATION AS REQUIRED. CONTRACTOR TO SUBMIT A COORDINATED LAYOUT SHOP DRAWING INDICATING ALL HVAC DIFFUSERS, SPRINKLER HEADS, SPEAKERS, CAMERAS, ETC. LOCATIONS TO ARCHITECT'S OFFICE FOR REVIEW AND APPROVAL PRIOR TO FABRICATION OF ANY DUCTWORK.
4. ALL CEILING HEIGHTS SHALL BE AS NOTED ABOVE FINISHED FLOOR. GC/CM TO VERIFY ALL CEILING HEIGHT AND INFORM ARCHITECT OF ANY DISCREPANCIES BEFORE STARTING ANY CEILING WORK.
5. MOUNTING HEIGHTS SHALL BE VERIFIED BY ARCHITECT.
6. CONTRACTOR TO REVIEW SPECIFICATIONS TO COMPLY WITH ALL APPLICABLE CODES PRIOR TO ORDERING.
7. CONTRACTOR TO SUBMIT A COORDINATED LAYOUT SHOP DRAWING INDICATING ALL HVAC DIFFUSERS, SPRINKLER HEADS, SPEAKERS, CAMERAS, ETC. LOCATIONS TO ARCHITECT'S OFFICE FOR REVIEW AND APPROVAL PRIOR TO FABRICATION OF ANY DUCTWORK.
8. CONTRACTOR TO SUBMIT SHOP DRAWINGS IN A TIMELY MANNER, ALLOWING FOR A MINIMUM OF 10 BUSINESS DAYS FOR REVIEW AND RESPONSE AND ALLOWING FOR APPLICABLE DELIVERY TIMES FOR SPECIFIED FIXTURES. THERE SHALL BE NO SUBSTITUTIONS WITHOUT PRIOR WRITTEN APPROVAL OF LIGHTING DESIGNER. REQUESTS FOR SUBSTITUTIONS WILL BE CONSIDERED ONLY IF ACCOMPANIED BY: (1) COMPLETE CATALOG NUMBER AND CUT INCLUDING PHOTOMETRICS, AND (2) UNIT PRICES FOR SPECIFIED FIXTURE AND PROPOSED SUBSTITUTE. LIGHTING DESIGNER'S FEES FOR REVIEW OF PROPOSED SUBSTITUTIONS MAY BE BACK-CHARGED TO CONTRACTOR.
9. SEE ENGINEERING DRAWINGS FOR ALL FIRE ALARM WORK INCLUDING AND NOT LIMITED TO LOCATIONS OF ALL DEVICES TO BE LOCATED/ COORDINATED WITH LOCATIONS OF LIGHT SWITCHES.
10. SEE ENGINEERING DRAWINGS FOR ALL HVAC WORK INCLUDING AND NOT LIMITED TO LOCATIONS OF DIFFUSERS (SUPPLY/RETURN), THERMOSTATS, ETC. THERMOSTAT LOCATION(S) TO BE COORDINATED/LOCATED IN ALIGNMENT WITH LIGHT SWITCHES.
11. HVAC CONTRACTOR TO CLEAN UP ANY DEBRIS LEFT IN PLENUM AFTER INSTALLATION. ALL VOIDS OR BLANKS TO BE PAINTED BLACK PRIOR TO INSTALLATION OF CEILING.
12. WRITTEN INSTRUCTIONS FOR THE OPERATION OF THERMOSTATS, AC UNITS, ETC. SHALL BE PROVIDED UPON COMPLETION OF THE PROJECT.
13. CEILING DIFFUSERS MAY ONLY BE UTILIZED AS A MEANS OF ACCESS TO AREAS ABOVE THE CEILING WHEN PERMITTED BY CODE. OTHERWISE GC/CM IS TO INSTALL ALL REQUIRED ACCESS PANELS AND/OR CATWALKS.
14. CONTRACTOR TO INCLUDE ALL TESTING, PROGRAMMING AND FINAL CONNECTIONS REQ'D. TO TIE INTO BUILDING LIFE SAFETY SUPPORT AND CLASS E SYSTEMS.
15. ALL EXPOSED SPRINKLER HEAD TO ALIGN WITH CENTERLINE OF FIXTURES.
16. GC/CM TO PROVIDE DRAG-LINES FOR AV, SECURITY AND OTHER CLIENT'S VENDOR.
17. CEILING PLANE SHALL BE LEVEL & TRUE, & IN ALIGNMENT WITH ALL LIGHTING, SPRINKLER, HVAC, & OTHER ELEMENTS INCORPORATED IN ITS CONSTRUCTION. GRID SHALL BE CONTINUOUS THROUGHOUT THE DEMISED AREA.
18. PROVIDE ACCESS DOORS AS REQUIRED FOR EQUIPMENT UNITS, LED DRIVERS, REMOTE BALLASTS, REMOTE TRANSFORMERS, WATER VALVES ETC. ALL EXPOSED ACCESS DOORS TO BE GFRC, PAINTED TO MATCH
19. CEILING TO FIXTURE COMPATIBILITY SHALL BE VERIFIED BY ELECTRICAL CONTRACTOR AND ORDERED APPROPRIATELY SO THAT RECESSED FIXTURES FINISH FLUSH WITH CEILING.
20. ALL VOLTAGES TO BE VERIFIED AND COORDINATED BY ELECTRICAL ENGINEER.
21. ALL REMOTE BALLAST LOCATIONS TO BE ACCESSIBLE, WELL VENTED IN CONCEALED LOCATIONS BEHIND MILLWORK PANELS, BOTH AREAS AND WALL VOIDS.
22. GC/CM TO PROVIDE 10% OF ADDITIONAL CEILING PANELS, FOR BACK OF HOUSE AREA.
23. MULTIPLE SWITCHES AND/OR DIMMERS SHALL BE GANGED TOGETHER.
24. LIGHTING VENDOR TO SUPPLY 20% ADDITIONAL LAMPS WITH LIGHT FIXTURES.
25. GC SHALL FURNISH & INSTALL CONTINUOUS GRID SUSPENDED ACOUSTICAL TILE CEILING MATERIAL AS SPECIFIED & AS INDICATED ON PLAN & PROVIDE CUT OUTS & OTHER PROVISIONS FOR OTHER TRADES AS REQUIRED.
26. HUNG CEILING SHALL BE IN CONFORMANCE WITH ASTM C635 & WITH GENERAL PRACTICES & APPLICABLE STATE & LOCAL ORDINANCES. INSTALLATION IN CONFORMANCE WITH MANUFACTURER RECOMMENDATIONS & ASTM C636.
27. GC SHALL COORDINATE WORK WITH CARPENTRY TRADES TO PROVIDE FOR A NEAT, LEVEL VISUAL LINE AT THE INTERSECTION OF CEILING & PARTITIONS.
28. FASCIAS/SOFFITS SHALL BE LEVEL & TRUE, FREE OF SURFACE DISTORTION & DIMENSIONED ACCORDING TO DETAILS SHOWN.
29. ALL WOOD MEMBERS USED FOR PURPOSES OF BACKING AND BLOCKING IN AN APPROVED MANNER SHALL BE FIRE RETARDANT TREATED
30. ALL FIREPROOFING & TENTING TO BE THE RESPONSIBILITY OF THE GC/CM.

COPYRIGHT © DESIGN REPUBLIC PARTNERS LLP

designrepublic


DESIGN REPUBLIC PARTNERS ARCHITECTS LLP
501 MADISON AVENUE 11th FLOOR NEW YORK, NEW YORK 10022
TELEPHONE 646 747 3730 WWW.DESIGNREPUBLIC.US.COM
ARCHITECTURE PLANNING DESIGN

CLIENT/OWNER/TENANT
FAT FACE LTD
1-3 RIDGWAY HAVANT, PO9 1QJ
UNITED KINGDOM
CONTACT: DAVID LILLEY
TEL: 0044.2392.441100
E: DAVID.LILLEY@FATFACE.COM

DESIGNER
BOX OF FROGS LTD
2 WILLOW PARK STOKE POGES BUCKS SL2 4ES
CONTACT: SARAH MALCOM-RICHARDS
TEL: 007748606997
E: SARAH@BOXOFFROGS.WEB.COM

MEP ENGINEER
FISKAA
589 8TH AVENUE
NEW YORK, NY, 10018
CONTACT: ERIC MARTINSEN
TEL: 212.736.9600
E: EMARTINSEN@FISKAA.COM

STRUCTURAL ENGINEER
ARMOUR UNSDERFER ENGINEERING INC. P.S.
555 116TH AVE NE, SUITE 118
BELLEVUE WA 98004
CONTACT: BRIAN UNSDERFER
TEL: 425.614.0949
E: brianu@au-eng.com


| | Issue | Date | Issue | Date |
|---|---|---|---|---|
| A. | ISSUE FOR HISTORIC REVIEW | 07/01/15 | ⚠ ISSUE FOR HISTORIC REVIEW | 07/16/15 |
| B. | ISSUE FOR LL REVIEW/PRELIM PRICING | 07/10/15 | | |
| C. | ISSUE FOR DEMO PERMIT | 07/20/15 | | |

Project
FAT FACE PORTLAND
34 EXCHANGE STREET
PORTLAND, ME 04104

Drawing Title
GENERAL NOTES &
TYPICAL CEILING DETAILS

| Project No. | Drawn By | Date | Scale |
|---|---|---|---|
| 5063.02 | --- | __-__-__ | NTS |

Seal: LICENSED ARCHITECT Barry Michael Ludlow ARC4239 STATE OF MAINE

Floor(s): 00

Drawing No.: G-001.00

___ of ___

Z:\Fat Face\Portland\D-Drawings\4-Contract documents\4.1-Drawings\FF_Portland-G001-G002_Gen Notes.dwg