4099-9003 IDNet SLC DOUBLE ACTION PUSH MANUAL STATION

PRODUCT INFORMATION

FEATURES:
- UL LISTED
- DOUBLE ACTION (PUSH/PULL), IDNet SLC ADDRESSABLE
- PULL LEVEL PROTRUDES WHEN ALARMED
- TAMPER RESISTANT RESET KEY LOCK
- MOUNTING: SEMI-FLUSH, SURFACE
- OPERATING TEMPERATURE RANGE: 32 – 120° F
- OPERATING HUMIDITY RANGE: 0 – 93% RH
- ADAPTER PLATES: 2099-9813 OR 2099-9814 CAN BE USE FOR RETROFIT APPLICATIONS.
- 5" HIGH X 3 3/4" WIDE X 1" DEEP
- SCREW TERMINALS FOR 18 TO 14 AWG WIRE
- ADDRESSED BY MEANS OF AN 8 POSITION DIP SWITCH
- COMPATIBLE WITH IDNet SLC/MAPNET

OPERATION:
ACTIVATION:
4099-9003 DOUBLE ACTION STATION REQUIRES A FIRM DOWNWARD PULL TO ACTIVATE THE ALARM SWITCH. COMPLETING THIS ACTION BREAKS AN INTERNAL PLASTIC BREAK-ROD THAT IS VISIBLE BELOW THE PULL LEVER (USE OF PLASTIC ROD IS OPTIONAL). THE PULL LEVEL LATCHES INTO THE ALARM POSITION AND REMAINS EXTENDED OUT OF THE HOUSING TO PROVIDE A VISIBLE INDICATION.

RESETTING
4099-9003 DOUBLE ACTION STATION REQUIRES A KEY TO RESET THE ACTIVATION LEVER AND DEACTIVATE THE ALARM SWITCH. (IF OPTIONAL PLASTIC BREAK ROD WAS USED IT MUST BE REPLACED)

CONSTRUCTION:
STATION HOUSING AND PULL LEVER ARE CONSTRUCTED OF CHIP RESISTANT AND DIRT RESISTANT, HIGH IMPACT LEXAN. HOUSING IS RED WITH RAISED WHITE LETTERING AND PULL LEVER IS WHITE WITH RED RAISED LETTERING.
* LEXAN IS A REGISTERED TRADEMARK OF THE GENERAL ELECTRIC CO.

APPLICATION:
PULL STATIONS SHALL BE INSTALLED IN ACCORDANCE WITH NFPA 72 AND ADA GUIDE LINES.

INTRODUCTION:
THE 4099-9003 ADDRESSABLE PULL STATION PROVIDES TWO-STATE STATUS INFORMATION (NORMAL AND SHORT) TO THE IDNet SLC COMPATIBLE FIRE ALARM CONTROL PANEL (FACP) VIA THE IDNet SLC CHANNEL. THE IDNet SLC CHANNEL PROVIDES THE COMMUNICATION LINK BETWEEN PULL STATION AND THE FACP AND POWERS THE ENTIRE CIRCUITRY.

WIRING:
1. ALL WIRING TO COMPLY WITH LOCAL CODE.
2. CONDUCTORS MUST TEST FREE OF ALL GROUNDS.
3. MAINTAIN CORRECT POLARITY
4. IDNet SLC LINES ARE TO BE 18 AWG TWISTED SHIELDED PAIR
5. MAXIMUM LINE RUN FROM PANEL TO FARTHEST DEVICE NOT TO EXCEED 2500 FEET.
6. MAXIMUM TOTAL WIRE (INCLUDING ALL T-TAPS) FROM PANEL NOT TO EXCEED 10,000 FEET.
7. MAXIMUM QUANTITY OF DEVICES PER CIRCUIT: 250
8. TERMINALS 1 AND 2 FOR FIELD WIRING. TERMINALS 3 AND 4 ARE FACTORY WIRING.
9. WIRE NUT, SPLICE, OR SOLDER THE SHIELD WIRES.
10. IF SHIELD IS PRESENT, IT SHOULD BE CONNECTED TO THE OUTGOING IDNet SHIELD TO PROVIDE A CONTINUOUS SHIELD OVER THE LENGTH OF THE IDNet SLC CHANNEL. SHIELD SHOULD BE INSULATED FROM THE ELECTRICAL BOX.
11. SEE INSTALLATION INSTRUCTIONS 574-332

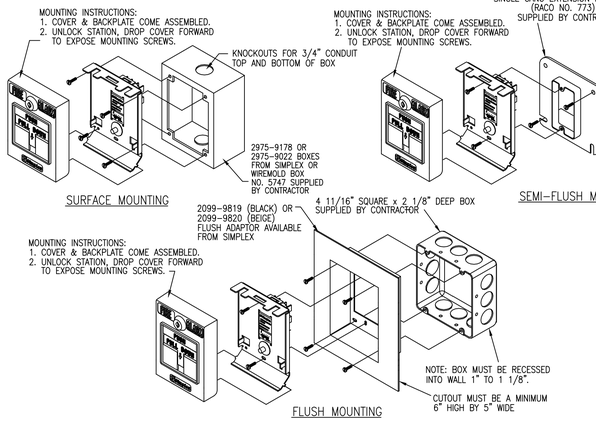

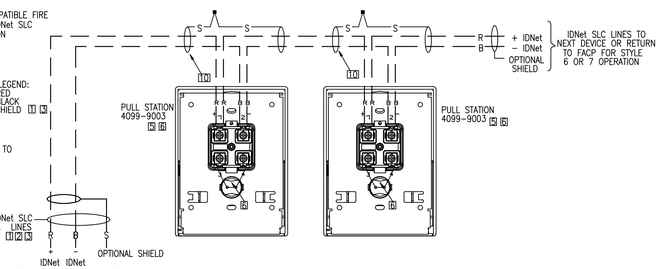

4098-9792 STANDARD SENSOR BASE

PRODUCT INFORMATION

FEATURES:
- UL LISTED, FM APPROVED
- TRUEALARM ANALOG SENSING PROVIDES DIGITAL TRANSMISSION OF ANALOG SENSOR VALUES VIA MAPNETII, OR IDNet SLC TWO WIRE COMMUNICATIONS
- FIRE ALARM CONTROL PANEL PROVIDES:
  - INDIVIDUAL SENSITIVITY SELECTION FOR EACH SENSOR
  - PEAK VALUE LOGGING ALLOWING ACCURATE ANALYSIS FOR SENSITIVITY SELECTION
  - AUTOMATIC ENVIRONMENTAL COMPENSATION
  - DISPLAY OF SENSITIVITY IN PERCENT PER FOOT
  - MULTISTAGE ALARM OPERATION
  - ABILITY TO DISPLAY AND PRINT DETAILED SENSOR INFORMATION IN PLAIN ENGLISH LANGUAGE
- PHOTOELECTRIC SMOKE SENSOR 4098-9714: SEVEN LEVELS OF SENSITIVITY FROM 0.2% TO 3.7%
- IONIZATION SMOKE SENSOR 4098-9717: FOUR LEVELS OF SENSITIVITY FROM 0.5% TO 1.7%.
- HEAT SENSOR 4098-9733:
  - RATE-OF-RISE TEMPERATURE DETECTION IS SELECTABLE AT THE CONTROL PANEL FOR EITHER 15°F OR 20°F PER MINUTE
  - FIXED TEMPERATURE SENSING IS INDEPENDENT OF RATE-OF-RISE AND PROGRAMMABLE TO OPERATE AT 135°F OR 155°F
  - TRUEALARM HEAT SENSORS CAN BE PROGRAMMED AS A UTILITY DEVICE TO MONITOR FOR TEMPERATURE EXTREMES IN THE RANGE FROM 32° F TO 120° F.
- UL STANDARD SPACING:
  - 60 FT SPACING FOR 135° F
  - 40 FT SPACING FOR 155° F
- INTEGRAL RED LED FOR POWER-ON (PULSING), OR ALARM OR TROUBLE (STEADY ON)
- BASE MOUNTED ADDRESS SELECTION:
  - ACCESSIBLE FROM FRONT (DIP SWITCH UNDER SENSOR)
  - ADDRESS REMAINS WITH ITS PROGRAMMED LOCATION
- FOR USE WITH SIMPLEX 4010, 4100, 4020, AND 4120 SERIES CONTROL PANELS.
- MAXIMUM QUANTITY OF DEVICES:
  - 127 FOR 4020, 4100, 4120
  - 250 FOR 4010, 4100
- MOUNTING: CEILING OR WALL
- COLOR : FROST WHITE
- BASE DIMENSIONS: 15/16" X 4-7/8"

SPECIFICATIONS:
- UL LISTED TEMPERATURE RANGE: 32°F TO 100°F
- OPERATING TEMPERATURE RANGE: 32°F TO 120°F
- HUMIDITY RANGE: 10% TO 95% RH
- PHOTOELECTRIC SENSOR AIR VELOCITY RANGE: 0-2000 FT/MIN
- IONIZATION SENSOR AIR VELOCITY RANGE: 0-300 FT/MIN
- WIRING CONNECTIONS: SCREW TERMINALS FOR IN/OUT WIRING, #18 TO #14 AWG
- COMMUNICATIONS MAPNETII/IDNet SLC: 1 ADDRESS PER BASE
  VOLTAGE (MAPNETII/IDNet SLC): 24-40VDC
  CURRENT: 400uA TYPICAL

DESCRIPTION:
TRUEALARM SENSOR BASES CONTAIN INTEGRAL ADDRESSABLE ELECTRONICS THAT CONSTANTLY MONITOR THE STATUS OF THE DETACHABLE PHOTOELECTRIC, IONIZATION, OR HEAT SENSORS. EACH SENSOR'S OUTPUT IS DIGITIZED AND TRANSMITTED TO THE SYSTEM FIRE ALARM CONTROL PANEL EVERY FOUR SECONDS. SINCE TRUEALARM SENSORS USE THE SAME BASE, DIFFERENT SENSOR TYPES CAN BE EASILY INTERCHANGED TO MEET SPECIFIC LOCATION REQUIREMENTS. THIS FEATURE ALLOWS INTENTIONAL SENSOR SUBSTITUTION DURING BUILDING CONSTRUCTION. WHEN CONDITIONS ARE TEMPORARILY DUSTY, INSTEAD OF COVERING THE SMOKE SENSORS. HEAT SENSORS MAY BE INSTALLED WITHOUT REPROGRAMMING THE CONTROL PANEL, ALTHOUGH THE CONTROL PANEL WILL INDICATE AN INCORRECT SENSOR TYPE, THE HEAT SENSOR WILL OPERATE AS A DEFAULT SENSITIVITY PROVIDING HEAT DETECTION FOR BUILDING PROTECTION AT THAT LOCATION.

WIRING:
1. ALL WIRING TO COMPLY WITH LOCAL CODE.
2. CONDUCTORS MUST TEST FREE OF ALL GROUNDS.
3. MAINTAIN CORRECT POLARITY
4. MAPNETII/IDNet SLC WIRING TO BE #18 AWG TWISTED SHIELDED PAIR
5. IF SHIELD IS PRESENT, CONNECT TO THE OUTGOING IDNet SLC SHIELD TO PROVIDE A CONTINUOUS SHIELD OVER THE LENGTH OF THE IDNet SLC CHANNEL. METHOD OF SPLICE DETERMINED BY AHJ.
6. REFER TO INSTALLATION INSTRUCTIONS (574-707)
7. REFER TO APPLICATION MANUAL (574-709)

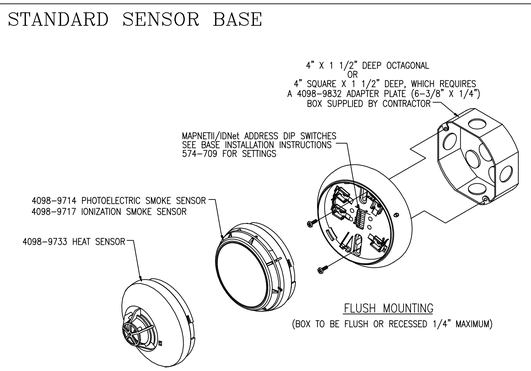

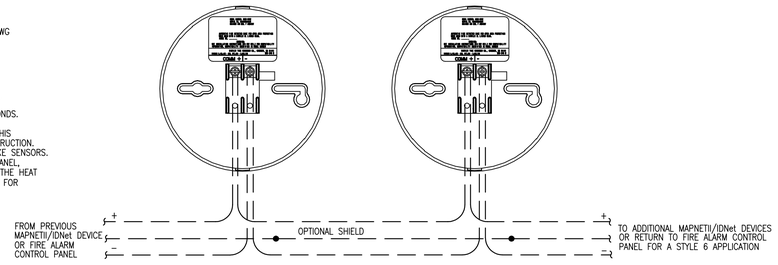

4098-9792 STANDARD SENSOR BASE

PRODUCT INFORMATION

FEATURES:
- UL LISTED, FM APPROVED
- TRUEALARM ANALOG SENSING PROVIDES DIGITAL TRANSMISSION OF ANALOG SENSOR VALUES VIA MAPNETII, OR IDNet SLC TWO WIRE COMMUNICATIONS
- FIRE ALARM CONTROL PANEL PROVIDES:
  - INDIVIDUAL SENSITIVITY SELECTION FOR EACH SENSOR
  - PEAK VALUE LOGGING ALLOWING ACCURATE ANALYSIS FOR SENSITIVITY SELECTION
  - AUTOMATIC ENVIRONMENTAL COMPENSATION
  - DISPLAY OF SENSITIVITY IN PERCENT PER FOOT
  - MULTISTAGE ALARM OPERATION
  - ABILITY TO DISPLAY AND PRINT DETAILED SENSOR INFORMATION IN PLAIN ENGLISH LANGUAGE
- PHOTOELECTRIC SMOKE SENSOR 4098-9714: SEVEN LEVELS OF SENSITIVITY FROM 0.2% TO 3.7%
- IONIZATION SMOKE SENSOR 4098-9717: FOUR LEVELS OF SENSITIVITY FROM 0.5% TO 1.7%.
- HEAT SENSOR 4098-9733:
  - RATE-OF-RISE TEMPERATURE DETECTION IS SELECTABLE AT THE CONTROL PANEL FOR EITHER 15°F OR 20°F PER MINUTE
  - FIXED TEMPERATURE SENSING IS INDEPENDENT OF RATE-OF-RISE AND PROGRAMMABLE TO OPERATE AT 135°F OR 155°F
  - TRUEALARM HEAT SENSORS CAN BE PROGRAMMED AS A UTILITY DEVICE TO MONITOR FOR TEMPERATURE EXTREMES IN THE RANGE FROM 32° F TO 120° F.
- UL STANDARD SPACING:
  - 60 FT SPACING FOR 135° F
  - 40 FT SPACING FOR 155° F
- INTEGRAL RED LED FOR POWER-ON (PULSING), OR ALARM OR TROUBLE (STEADY ON)
- BASE MOUNTED ADDRESS SELECTION:
  - ACCESSIBLE FROM FRONT (DIP SWITCH UNDER SENSOR)
  - ADDRESS REMAINS WITH ITS PROGRAMMED LOCATION
- FOR USE WITH SIMPLEX 4010, 4100, 4020, AND 4120 SERIES CONTROL PANELS.
- MAXIMUM QUANTITY OF DEVICES:
  - 127 FOR 4020, 4100, 4120
  - 250 FOR 4010, 4100
- MOUNTING: CEILING OR WALL
- COLOR : FROST WHITE
- BASE DIMENSIONS: 15/16" X 4-7/8"

SPECIFICATIONS:
- UL LISTED TEMPERATURE RANGE: 32°F TO 100°F
- OPERATING TEMPERATURE RANGE: 32°F TO 120°F
- HUMIDITY RANGE: 10% TO 95% RH
- PHOTOELECTRIC SENSOR AIR VELOCITY RANGE: 0-2000 FT/MIN
- IONIZATION SENSOR AIR VELOCITY RANGE: 0-300 FT/MIN
- WIRING CONNECTIONS: SCREW TERMINALS FOR IN/OUT WIRING, #18 TO #14 AWG
- COMMUNICATIONS MAPNETII/IDNet SLC: 1 ADDRESS PER BASE
  VOLTAGE (MAPNETII/IDNet SLC): 24-40VDC
  CURRENT: 400uA TYPICAL

DESCRIPTION:
TRUEALARM SENSOR BASES CONTAIN INTEGRAL ADDRESSABLE ELECTRONICS THAT CONSTANTLY MONITOR THE STATUS OF THE DETACHABLE PHOTOELECTRIC, IONIZATION, OR HEAT SENSORS. EACH SENSOR'S OUTPUT IS DIGITIZED AND TRANSMITTED TO THE SYSTEM FIRE ALARM CONTROL PANEL EVERY FOUR SECONDS. SINCE TRUEALARM SENSORS USE THE SAME BASE, DIFFERENT SENSOR TYPES CAN BE EASILY INTERCHANGED TO MEET SPECIFIC LOCATION REQUIREMENTS. THIS FEATURE ALLOWS INTENTIONAL SENSOR SUBSTITUTION DURING BUILDING CONSTRUCTION. WHEN CONDITIONS ARE TEMPORARILY DUSTY, INSTEAD OF COVERING THE SMOKE SENSORS. HEAT SENSORS MAY BE INSTALLED WITHOUT REPROGRAMMING THE CONTROL PANEL, ALTHOUGH THE CONTROL PANEL WILL INDICATE AN INCORRECT SENSOR TYPE, THE HEAT SENSOR WILL OPERATE AS A DEFAULT SENSITIVITY PROVIDING HEAT DETECTION FOR BUILDING PROTECTION AT THAT LOCATION.

WIRING:
1. ALL WIRING TO COMPLY WITH LOCAL CODE.
2. CONDUCTORS MUST TEST FREE OF ALL GROUNDS.
3. MAINTAIN CORRECT POLARITY
4. MAPNETII/IDNet SLC WIRING TO BE #18 AWG TWISTED SHIELDED PAIR
5. IF SHIELD IS PRESENT, CONNECT TO THE OUTGOING IDNet SLC SHIELD TO PROVIDE A CONTINUOUS SHIELD OVER THE LENGTH OF THE IDNet SLC CHANNEL. METHOD OF SPLICE DETERMINED BY AHJ.
6. REFER TO INSTALLATION INSTRUCTIONS (574-707)
7. REFER TO APPLICATION MANUAL (574-709)

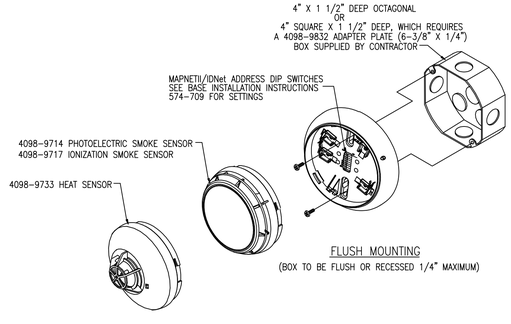

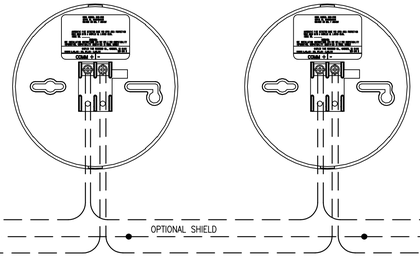

4098-9798 CO SENSOR BASE WITH SOUNDER

PRODUCT INFORMATION

FEATURES:
- UL LISTED TO STANDARD 268, SMOKE DETECTORS FOR FIRE ALARM SIGNALING SYSTEMS AND STANDARD 2075, GAS AND VAPOR DETECTORS AND SENSORS; ALLOWING SYSTEMS TO BE LISTED TO STANDARD 2034, SINGLE AND MULTIPLE STATION CARBON MONOXIDE ALARMS.
- CO SENSOR BASES SUPPORT (AND REQUIRE) A TRUEALARM ANALOG PHOTOELECTRIC, PHOTO/HEAT, HEAT, OR IONIZATION SENSOR.
  - PHOTOELECTRIC SMOKE SENSOR 4098-9714: SEVEN LEVELS OF SENSITIVITY FROM 0.2% TO 3.7%
  - IONIZATION SMOKE SENSOR 4098-9717: FOUR LEVELS OF SENSITIVITY FROM 0.5% TO 1.7%.
  - HEAT SENSOR 4098-9733:
    - RATE-OF-RISE TEMPERATURE DETECTION IS SELECTABLE AT THE CONTROL PANEL FOR EITHER 15°F (-9°C) OR 20°F (-6.7°C) PER MINUTE
    - FIXED TEMPERATURE SENSING IS INDEPENDENT OF RATE-OF-RISE AND PROGRAMMABLE TO OPERATE AT 135°F (57°C) OR 155°F (68°C)
    - TRUEALARM HEAT SENSORS CAN BE PROGRAMMED AS A UTILITY DEVICE TO MONITOR FOR TEMPERATURE EXTREMES IN THE RANGE FROM 32° F TO 155° F (0° C TO 68° C).
    - UL STANDARD SPACING: 60 FT (18.3 M) SPACING FOR 135°F (57°C)
      40 FT (12.2 M) SPACING FOR 155° F (68°C)
- CO SENSOR BASES ARE MULTI-POINT DEVICES, CONSUME ONLY ONE IDNet SLC ADDRESS, AND RECEIVE BOTH COMMUNICATIONS AND SENSOR POWER FROM THE IDNet SLC CHANNEL.
- MODULAR TRUEALARM SENSOR BASE WITH BUILT-IN ELECTRONIC ALARM SOUNDER:
  - SOUNDER OPERATION IS UL LISTED AS AN AUDIBLE NOTIFICATION APPLIANCE TO UL STANDARD 464.
  - SOUNDER CAN BE POWERED FROM 24 VDC OR FROM A COMPATIBLE NOTIFICATION APPLIANCE CIRCUIT (NAC)
  - SOUNDER CAN BE SYNCHRONIZED CODED/TEMPORAL CODED BY COMMUNICATIONS, NAC OR TEMPORAL CODE 4 MODULE 4905-9835
  - SOUNDER CAN BE MANUALLY ACTIVATED FROM THE CONTROL PANEL
- INTEGRAL RED LED FOR POWER-ON (PULSING), ALARM OR TROUBLE (STEADY ON)
- FOR USE WITH SIMPLEX 4100 SERIES CONTROL PANELS.
- MAXIMUM QUANTITY OF DEVICES: 250 FOR 4100 IDNet SLC CHANNEL
- MOUNTING: CEILING OR WALL
- BASE DIMENSIONS: 1-1/8" X 6-7/16" (2.85 CM X 16.5 CM)

SPECIFICATIONS:
- UL LISTED TEMPERATURE RANGE: 32°F TO 100°F (0°C TO 38°C)
- OPERATING TEMPERATURE RANGE: 4098-9714 = 15°F TO 122°F (-9°C TO 50°C)
  4098-9717 OR 4098-9733 = 32°F TO 122°F (0°C TO 50°C)
- HUMIDITY RANGE: 10% TO 95% RH
- PHOTOELECTRIC SENSOR AIR VELOCITY RANGE: 0-2000 FT/MIN (610 M/MIN)
- IONIZATION SENSOR AIR VELOCITY RANGE: 0-200 FT/MIN (61 M/MIN)
- CO SENSOR SPECIFICATIONS

UL 2034 REQUIREMENTS REFERENCE	70 PPM CONCENTRATION	ALARM WINDOW 60 TO 240 MINUTES
	150 PPM CONCENTRATION	ALARM WINDOW 10 TO 50 MINUTES
	400 PPM CONCENTRATION	ALARM WINDOW 4 TO 15 MINUTES

- SOUNDER OPERATING SPECIFICATIONS

SOUNDER VOLTAGE		16 TO 32 VDC FROM STEADY EXTERNAL SOURCE, NAC OR 4905-9835 CODE 4 MODULE.
ALARM CURRENT (SOUNDER ON)		17 mA @ 24 VDC, 24 mA MAXIMUM @ 32VDC
SOUNDER OUTPUT		88 dBA MINIMUM @ 10 FT. PER UL STANDARD 464, AUDIBLE SIGNALING APPLIANCE APPLIANCES AND UL STANDARD 268, SMOKE DETECTORS FOR FIRE PROTECTIVE SIGNALING SYSTEMS
SOUNDER POWER SUPERVISION (SELECTABLE)	SUPERVISED	SELECT FOR CONTINUOUS 24 VDC POWER, LOSS OF POWER IS COMMUNICATED TO PANEL
	UNSUPERVISED	SELECT WHEN CONNECTED TO NAC FOR SOUNDER POWER, NAC PROVIDES SUPERVISION
NAC POWERED OPERATION		WHEN IN ALARM, WILL SOUND WHEN NAC IN ALARM, ALLOWING SYNCHRONIZED CODING (TEMPORAL OR MARCH TIME, ETC.) CONTROLLED BY THE NAC OR 4905-9835 MODULE.

DESCRIPTION:
TRUEALARM SENSOR BASES CONTAIN INTEGRAL ADDRESSABLE ELECTRONICS THAT CONSTANTLY MONITOR THE STATUS OF THE DETACHABLE PHOTOELECTRIC, IONIZATION, OR HEAT SENSORS. EACH SENSOR'S OUTPUT IS DIGITIZED AND TRANSMITTED TO THE SYSTEM FIRE ALARM CONTROL PANEL EVERY FOUR SECONDS.
THREE TYPES OF CO INFLUENCED OPERATION ARE AVAILABLE;
UL 2034 CO ALARM DETECTION; UL 2075 CO (OSHA) LEVEL MONITORING FOR VENTILATION CONTROL;
AND MULTI-CRITERIA FIRE SENSOR ANALYSIS WITH ALGORITHMS THAT COMBINES OPTICAL AND CO GAS MONITORING INFORMATION OPERATION OF A CO SENSOR BASE WITH A PHOTOELECTRIC SENSOR.

WIRING:
1. ALL WIRING TO COMPLY WITH LOCAL CODE.
2. CONDUCTORS MUST TEST FREE OF ALL GROUNDS.
3. MAINTAIN CORRECT POLARITY
4. IDNet SLC WIRING TO BE #18 AWG TWISTED SHIELDED PAIR
5. REFER TO INSTALLATION INSTRUCTIONS (574-707)
6. REFER TO APPLICATION MANUAL (574-709)
7. IF SHIELD IS PRESENT, CONNECT TO THE OUTGOING IDNet SLC SHIELD TO PROVIDE A CONTINUOUS SHIELD OVER THE LENGTH OF THE IDNet SLC CHANNEL. METHOD OF SPLICE DETERMINED BY AHJ.
8. MAXIMUM QUANTITY OF SENSORS WITH 4098-9798 SOUNDER BASES LIMITED TO 43 PER SLC IF OUTPUT IS CODED (TEMPORAL CODE, ETC.) IDNet SLC CONTROL.

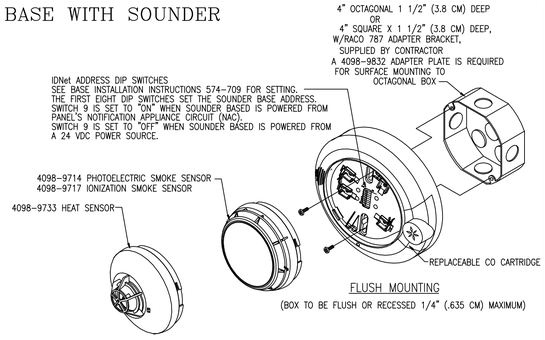

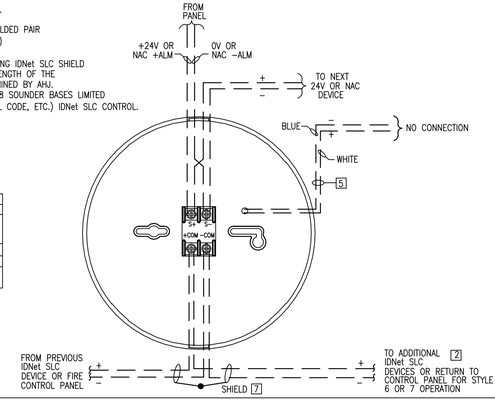

Reviewed for Code Compliance
Inspections Division
Approved with Conditions
Date: 04/03/15

tyco Simplex
Safer. Smarter. Tyco.™
DISTRICT - 147
20 THOMAS DRIVE
WESTBROOK, ME 04092
SERVICE: 207-842-6440
PHONE: 20
FAX: 20

PRESS HOTEL

PRESS HOTEL
119 EXCHANGE ST
PORTLAND, ME

MARK	DATE	CAD	CHK	DESCRIPTION
1	5-28-14	JD	KG	REVISED PER ENGINEERS COMMENTS & ADDED AOR SYSTEM

Revisions shown with 1 period

ISSUE LOG:

DRAWN BY:	JD
CHECKED BY:	IG
ISSUE DATE:	4/24/14
JOB #:	977465501
PROJECT #:	147:PRE-BOOKED

SIMPLEXGRINNELL © 2013

SYSTEM:
FIRE ALARM SYSTEM

SHEET:
WIRING TYPICALS

FA-701

IMPORTANT NOTICE TO USER: By accepting or using this drawing you the drawing contained herein. You agree to the following terms and conditions: The electronic information in the drawing may not be altered or transferred to any third party, used for other projects or additions to this project for which it was prepared, or used for completion of this project by any third party. Simplexgrinnell disclaims all liability by the user or any third party and can use at a user's sole risk. User shall not be liable to Simplexgrinnell for any and all claims for loss, damage or injury arising directly or indirectly therefrom.

LAST SAVED BY: JUDELACRUZ
LAST PRINTED: 5/29/2014 3:09:05 PM
24" x 36" - Arch D Size