Date: 06/16/14

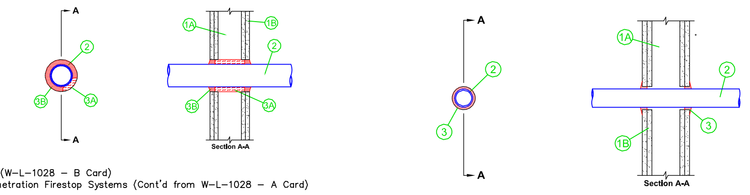

Guide XHEZ (W-L-1028 – B Card)
Through-Penetration Firestop Systems (Cont'd from W-L-1028 – A Card)

System No. W-L-1028
December 16, 1994
(Formerly System No. 465)
F Rating – 2 Hr.
T Rating – 0 Hr.
L Rating At Ambient – Less Than 1 CFM/sq ft
L Rating At 400 F – Less Than 1 CFM/sq ft

1. Wall Assembly – The fire-rated gypsum wallboard/stud wall assembly shall be constructed of the materials and in the manner specified in the individual U300 or U400 Series Wall and Partition Designs in the UL Fire Resistance Directory and shall include the following construction features:
A. Studs – Wall framing may consist of either wood studs or steel channel studs. Wood studs to consist of nom 2 by 4 in. lumber spaced 16 in. OC. Steel studs to be min 2-1/2 in. wide and spaced max 24 in. OC.
B. Gypsum Board* – Two layers of nom 5/8 in. thick gypsum wallboard, as specified in the individual Wall and Partition Design. Max diam of opening is 5 in.
2. Through Penetrants – One metallic pipe, conduit or tubing to be centered within the firestop system. A nom annular space of 15/16 in. is required within the firestop system. Pipe, conduit or tubing to be rigidly supported on both sides of wall assembly. The following types and sizes of metallic pipes, conduits or tubing may be used:
A. Steel Pipe – Nom 3 in. diam (or smaller) Schedule 5 (or heavier) steel pipe.
B. Conduit – Nom 3 in. diam (or smaller) steel electrical metallic tubing or steel conduit.
C. Copper Tubing – Nom 3 in. diam (or smaller) Type L (or heavier) copper tubing.
D. Copper Pipe – Nom 3 in. diam (or smaller) Regular (or heavier) copper pipe.
3. Firestop System – The firestop system shall consist of the following:
A. Packing Material – Min 3-1/2 in. thickness of min of 3.5 pcf fiberglass insulation wrapped around the through-penetrant and secured together by means of No. 24 AWG steel tie wire. Packing material shall be centered at mid-depth of opening and recessed from surfaces of wall as required to accommodate the required thickness of fill material.
B. Fill, Void or Cavity Material* – Caulk – Min 3/4 in. thickness of fill material applied within the annulus, flush with both surfaces of wall. Additional caulk shall be installed such that a min 1/4 in. thick crown is formed around the penetrating item.
SPECIFIED TECHNOLOGIES INC – SpecSeal 100, 101 or 105 Sealant
*Bearing the UL Classification Marking

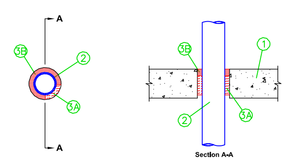

Guide XHEZ (C-AJ-1142 – B Card)
Through-Penetration Firestop Systems (Cont'd from C-AJ-1142 – A Card)

System No. C-AJ-1142
June 13, 1997
(Formerly System No. 637)
F Rating – 2 Hr
T Rating – 0 Hr
L Rating At Ambient – Less Than 1 CFM/sq ft
L Rating At 400 F – Less Than 1 CFM/sq ft

1. Floor or Wall Assembly – Min 4-1/2 in. thick reinforced lightweight or normal weight (100-150 pcf) concrete floor or min 5 in. thick reinforced lightweight or normal weight concrete wall. Wall may also be constructed of any UL Classified Concrete Blocks *. Max diam of opening is 5 in. See Concrete Blocks (CAZT) category in the Fire Resistance Directory for names of manufacturers.
2. Through Penetrants – One metallic pipe, conduit or tubing to be centered within the firestop system. Pipe, conduit or tubing to be rigidly supported on both sides of floor or wall assembly. A nom annular space of 15/16 in. is required within the firestop system. The following types and sizes of metallic pipes, conduits or tubing may be used:
A. Steel Pipe – Nom 3 in. diam (or smaller) Schedule 5 (or heavier) steel pipe.
B. Iron Pipe – Nom 3 in. diam (or smaller) cast or ductile iron pipe.
C. Conduit – Nom 3 in. diam (or smaller) steel electrical metallic tubing or steel conduit.
D. Copper Tubing – Nom 3 in. diam (or smaller) Type L (or heavier) copper tubing.
E. Copper Pipe – Nom 3 in. diam (or smaller) Regular (or heavier) copper pipe.
3. Firestop System – The firestop system shall consist of the following:
A. Packing Material – Min 3 in. thickness of min 6 pcf mineral wool batt insulation firmly packed into opening as a permanent form. Packing material to be recessed from top surface of floor or from both surfaces of wall as required to accommodate the required thickness of fill material.
B. Fill, Void or Cavity Material* – Sealant – Min 1 in. thickness of fill material applied within the annulus, flush with top surface of floor or with both surfaces of wall. SPECIFIED TECHNOLOGIES INC – SpecSeal 100, 101, 102, 105 sealant.
*Bearing the UL Classification Marking

5.1 PIPING PENETRATIONS DETAILS
SCALE: N.T.S.

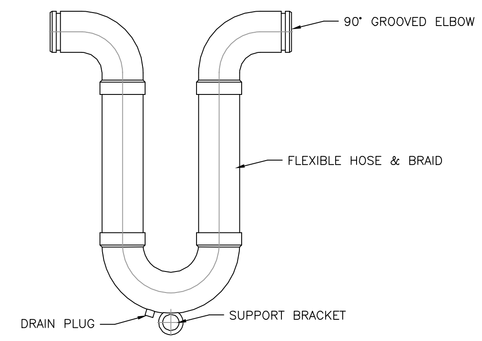

5.5 METRAFLEX DETAIL
SCALE: N.T.S.

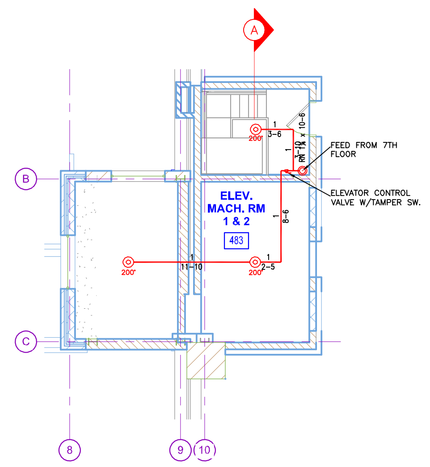

5.2 ROOF TOP ELEV. MACHINE ROOMS (ZONE 7)
TOTAL PROTECTED AREA 400 SQ.FT.
SCALE 1/8" = 1'-0"

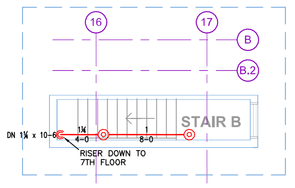

5.3 ROOF LEVEL OF STAIR B
SCALE 1/8" = 1'-0"

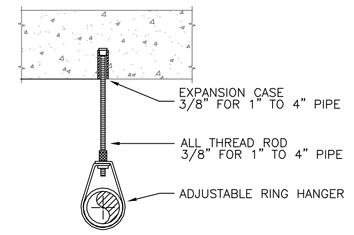

5.4 HANGER DETAIL
SCALE: N.T.S.

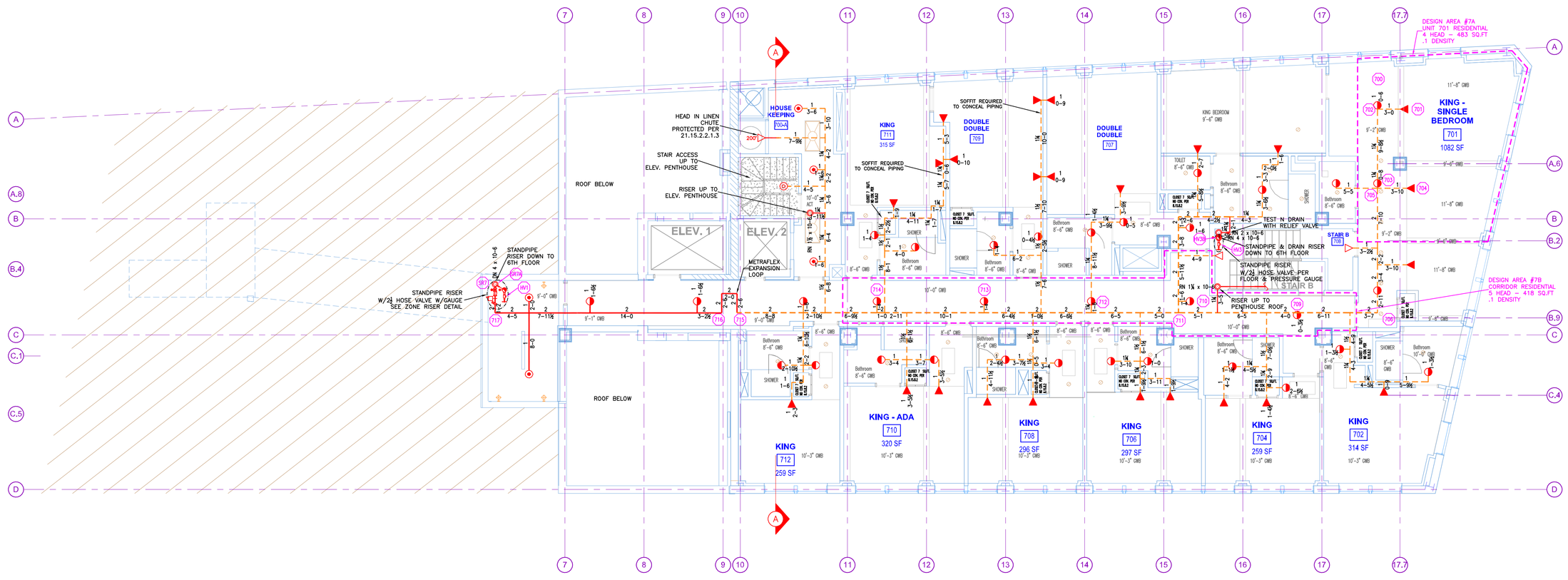

5 SEVENTH FLOOR (ZONE 7)
TOTAL PROTECTED AREA 9,200 SQ.FT.
SCALE 1/8" = 1'-0"

DESIGN AREA NUMBER 7A
HYDRAULIC DESIGN CRITERIA
LOCATION= 7TH FLOOR UNIT 701
TYPE OF SYSTEM= NFPA 13 WET
AREA OF OPERATION= 483-SQ.FT.
NUMBER OF SPRINKLERS= 4
DENSITY= .1 W/ HOSE DEMAND OF 100 GPM
HAZARD CLASS= LIGHT HAZARD / RESIDENTIAL
HEAD SPACING= 224 SQ.FT. 16' X 14'
SYSTEM DEMAND INCLUDING HOSE @
BASE OF RISER= 193-GPM 76-PSI
SAFETY MARGIN= 8-PSI

DESIGN AREA NUMBER 7B
HYDRAULIC DESIGN CRITERIA
LOCATION= 7TH FLOOR CORRIDOR
TYPE OF SYSTEM= NFPA 13 WET
AREA OF OPERATION= 418-SQ.FT.
NUMBER OF SPRINKLERS= 5
DENSITY= .1 W/ HOSE DEMAND OF 100 GPM
HAZARD CLASS= LIGHT HAZARD / RESIDENTIAL
HEAD SPACING= 224 SQ.FT. 16' X 14'
SYSTEM DEMAND INCLUDING HOSE @
BASE OF RISER= 214-GPM 73-PSI
SAFETY MARGIN= 11-PSI

DESIGN AREA NUMBER 7C
HYDRAULIC DESIGN CRITERIA
LOCATION= 3 MOST REMOTE HOSE CONNECTIONS
TYPE OF SYSTEM= NFPA 14 MANUAL WET
NUMBER OF HOSE VALVES = 3
DENSITY= 250 GPM @ 65 PSI
SYSTEM DEMAND INCLUDING 3 HOSE VALVES @
F.D.C. TO PUMPER= 750-GPM 146-PSI
SAFETY MARGIN= 19-PSI

PROJECT DESCRIPTION

BUILDING CONSTRUCTION:
THE BUILDING IS OF EXISTING CONSTRUCTION USE GROUP R-1 "HOTEL ROOMS" . 6 STORIES OF RESIDENTIAL UNITS ABOVE THE FIRST FLOOR. LOBBY AND RESTURANT ON THE FIRST FLOOR

BUILDING OCCUPANCY:
THE BUILDING WAS BUILT & DESIGNED FOR RESIDENTIAL LIVING USE. CONSISTING OF A RESTURANT ON THE 1ST FLOOR AND HOTEL ROOMS ON THE 2ND THRU 7TH FLOOR. THE LOWER LEVEL IS FOR MEETING ROOMS AND HOTEL STAFF. THE SUB-BASEMENT IS USED FOR TRASH STORAGE AND ALL OTHER MECHANICAL SERVICES USE. THERE IS ACCESS TO THE ROOF LEVEL WHERE THERE IS A ROOF TOP PATIO FOR THE RESIDENCE USE.

HAZARD DESIGNATIONS BY USE:
SUB-BASEMENT STORAGE, MECHANICAL SPACES, KITCHENETTE, LAUNDRY AND MULTIPURPOSE ROOM ARE ORDINARY HAZARD 1. ALL RESIDENTIAL UNITS, CORRIDORS, MEETING ROOM, LOBBY AND RESTROOMS ARE LIGHT HAZARD.

SPRINKLER SYSTEM DESIGN:
THERE IS A COMPLETE WET SYSTEM FOR THE ENTIRE BUILDING IN ACCORDANCE WITH NFPA 13 2010ed.

RESIDENTIAL LIVING SPACE ARE PROTECTED WITH RESIDENTIAL PENDENTS OR SIDEWALL SPRINKLER HEADS FED FROM CPVC PIPING. CORRIDORS ON THE 2ND THRU 7TH FLOOR HAVE RESIDENTIAL PENDENTS. CORRIDORS ON THE 1ST AND BELOW HAVE COMMERCIAL PENDENTS OR SIDEWALLS.

COMMERCIAL HEADS AND STEEL PIPING ON THE FIRST THRU SUB-BASEMENT LEVELS. ALSO IN ALL STAIRWELLS.

THE SPRINKLER SYSTEM HAS BEEN DESIGNED TO MEET APPLICABLE CODE REQUIREMENTS FOR AN NFPA 13 SYSTEM.

STANDPIPE SYSTEM DESIGN:
THERE ARE TWO MANUAL WET CLASS 1 STANDPIPE SYSTEMS. INTERCONNECTED AND FED FROM A TRIPLE 2 1/2" F.D.C. ON THE EXTERIOR OF THE EXCHANGE STREET SIDE FOR THE P.F.D. USE. 2 1/2" HOSE VALVES ON EACH STAIR LANDING IN BOTH TOWERS. HOSE VALVES HEIGHT SET @ 4' ABOVE STAIR LANDING. P.F.D TO PROVIDE THE NECESSARY WATER SUPPLY FOR THE PROPER USE OF THE STANDPIPES AND HOSE VALVES.

THE STANDPIPE SYSTEM HAS BEEN DESIGNED TO MEET APPLICABLE CODE REQUIREMENTS FOR AN NFPA 14 SYSTEM.

CPVC CURING TIMES

FOR TFP-400, TFP-500
VICTAULIC #899 & SPEARS FS-5

CURE TIMES WITH ONE STEP SOLVENT CEMENT
200 PSI (MAXIMUM) TEST PRESSURE

PIPE SIZE (INCHES)	AMBIENT TEMPERATURE DURING CURE PERIOD		
	60°F TO 120°F	40°F TO 59°F	0°F TO 39°F
3/4"	45 MIN.	1.5 HR.	24 HR.
1"	45 MIN.	1.5 HR.	24 HR.
1-1/4"	1.5 HR.	16 HR.	120 HR.
1-1/2"	1.5 HR.	16 HR.	120 HR.
2"	6 HR.	36 HR.	SEE NOTE 1
2-1/2"	8 HR.	72 HR.	SEE NOTE 1
3"	8 HR.	72 HR.	SEE NOTE 1

NOTE 1: FOR THESE SIZES, THE SOLVENT CEMENT CAN BE APPLIED AT TEMPERATURES BELOW 32°F, HOWEVER, THE SPRINKLER SYSTEM TEMPERATURE MUST BE RAISED TO A TEMPERATURE OF 32°F OR ABOVE AND ALLOWED TO CURE PER THE ABOVE RECOMMENDATIONS PRIOR TO PRESSURE TESTING.

CPVC HANGING NOTES

CPVC MAXIMUM SUPPORT SPACING (FT.)								
	NOMINAL PIPE SIZE							
PIPE SIZE	3/4"	1"	1-1/4"	1-1/2"	2"	2-1/2"	3"
HANGER SPACING	5-1/2'	6'	6-1/2'	7'	8'	9'	10'

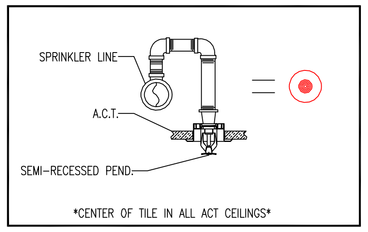

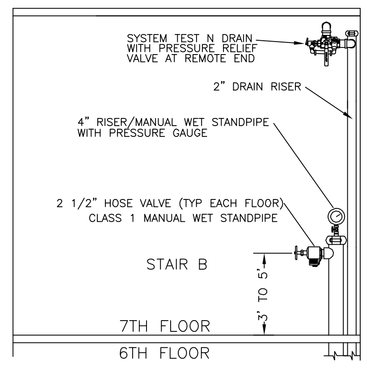

HD HOSE VALVE DETAIL
SCALE: N.T.S.

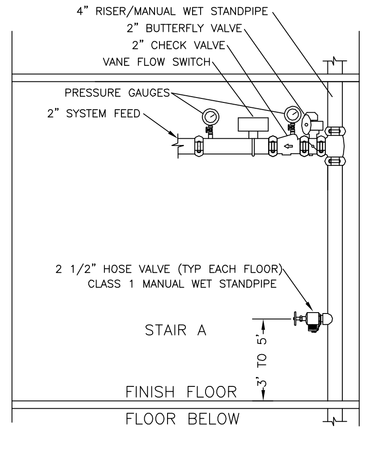

ZD ZONE RISER DETAIL
SCALE: N.T.S.

HIGH TECH FIRE PROTECTION
P.O. BOX 156
MINOT, ME. 04258-0258
TEL:(207) 998-2551 FAX:(207) 998-4187
MAINE LICENSE # 102

GENERAL CONTRACTOR ON RECORD:
WRIGHT RYAN CONSTRUCTION
10 DANFORTH STREET PORTLAND, ME
P.M. ALYSSA PARKER 207-773-6022
J.S. MIKE COLLINS

SPECIAL APPLICATIONS:
FIRE CAULK SPRINKLER PIPING PENETRATIONS THROUGH RATED WALLS PER HILTI SPECIFICATIONS.
PENDENT HEADS CENTER OF ACT.

LEGEND:
- RM/DN PIPE RISER UP OR DOWN
- AUXILIARY DRAIN
- PROPOSED STEEL PIPE
- PROPOSED CPVC PIPE
- SYSTEM RISER
- HYDRAULIC CALC. POINT

DESIGN & SYSTEM NOTES:
ALL PIPING 1 1/2" & LARGER TO BE SCHEDULE 10 WITH GROOVED DUCTILE IRON FITTING OR CPVC.
ALL PIPING 1 1/4" & SMALLER TO BE SCHEDULE 40 WITH APPROPRIATE FITTING OR CPVC.
POSITION, LOCATION, SPACING, AND USE OF SPRINKLERS SHALL BE IN ACCORDANCE WITH NFPA 13.
POSITION, LOCATION, SPACING, AND USE OF HANGERS SHALL BE IN ACCORDANCE WITH NFPA 13.
HYDRAULIC CALCULATION PROCEDURES HAVE BEEN DONE IN ACCORDANCE WITH NFPA 13. (SEE PLANS FOR LOCATION OF REMOTE AREAS, HYDRAULIC REFERENCE POINTS, AND SYSTEM DEMANDS.)
HIGH TECH FIRE PROTECTION IS TO BEGIN WORK AT 6" MAIN 1' AFF INSIDE OF BUILDING.
DIMENSIONS AND LOCATIONS GIVEN FOR SPRINKLER HEADS AND PIPE MAY VARY TO ACCOMMODATE ACTUAL FIELD CONDITIONS.
OWNER TO PROVIDE ADEQUATE HEAT THROUGHOUT BUILDING TO PROTECT WATER FILLED PIPING AND EQUIPMENT FROM FREEZING TEMPERATURES.
ONLY TRI-SEAL TYPE COUPLINGS TO BE INSTALLED ON DRY AND OR PRE-ACTION SYSTEMS.
OWNER IS RESPONSIBLE TO MAINTAIN THE SPRINKLER SYSTEM IN ACCORDANCE WITH THE LATEST EDITION OF NFPA 25, "INSPECTION, TESTING, & MAINTENANCE OF WATER-BASED FIRE PROTECTION SYSTEMS" AND/OR ALL APPLICABLE FEDERAL, STATE, AND/OR LOCAL LAWS, CODES AND ORDINANCES.
ALL MECHANICAL, ELECTRICAL AND PLUMBING TRADES TO COORDINATE THEIR WORK WITH SPRINKLER CONTRACTOR.
ALL ELECTRIC WORK IS TO BE DONE BY OTHERS.

HEAD LEGEND:
RELIABLE* MODEL F1FR56 — 5 /155° K=5.6 — 1/2" WHITE PENDENT SEMI-RECESSED ESC. *CENTER OF TILE IN ACT*
RELIABLE* MODEL F1FR56 — 6 /155° K=5.6 — 1/2" BRASS UPRIGHT ON SPRIGS. DEFLECTORS 1" TO 12" BELOW NON-COMBUSTIBLE CEILINGS
RELIABLE* MODEL F1FR56 — 3 /155° K=5.6 — 1/2" WHITE HORIZONTAL SIDEWALL SEMI REC. ESC. DEFLECTORS 4" TO 6" BELOW NON-COMBUSTIBLE CEILINGS
RELIABLE* MODEL F1RES58 — 35 /155° K=5.8 — 1/2" RESIDENTIAL WHITE PENDENT SEMI RECESSED ESCUTCHEON 16' x 14' MAX SPACING
RELIABLE* MODEL F1RES58 — 25 /155° K=5.8 — 1/2" RESIDENTIAL WHITE SIDEWALL SEMI RECESSED ESCUTCHEON 16' x 14' MAX SPACING DEFLECTORS 4" TO 6" BELOW CEILING

OR APPROVED EQUAL

TOTAL HEADS ON THIS SHEET: 74

SCALE: 2 1 0 4 8 — 1/8"=1'-0"

REVISIONS:
NO. DATE: DESCRIPTION:
2 5-13-14 NEW H20 INFO

DATE: APRIL 2, 2014
DESIGNER: ED POULIN (RMS# 515)
NICET LEVEL: IV CERT # 108534
CHECKED BY: J. FOSS

LOCATION:
119 EXCHANGE STREET
PORTLAND, ME

DRAWING TITLE:
THE PRESS HOTEL
7TH FLOOR & ROOF EMR (ZONE 7)
FIRE PROTECTION PLAN (NFPA 13 2010ed.)

DRAWING NO.:
FP-05

NICET LEVEL IV — EDWARD M. POULIN — MAINE RMS #515 — FIRE PROTECTION ENGINEERING