LED dimming requires an exact match between the LED array, driver and control. Lutron cannot guarantee compatibility or performance without testing this combination.

To confirm what products Lutron has available or what interfaces may be required, call 1-877-DIM-LED8 or check Lutron's Product Compatibility Matrix on-line at www.lutron.com/LED.

To request the testing of an LED product by Lutron manufacturers can fill out an LED Evaluation Request Form on-line at www.lutron.com/LED or contact LEDs@lutron.com.

Lutron can guarantee compatibility and performance of Lutron Hi-lume A-Series LED Drivers used with appropriate Lutron controls. The Hi-lume A-Series LED Driver can be used on products under 40 Watts with suitable mounting locations. Please refer to the Specification Submittal Sheet for further information.

If using untested, non-Lutron LED drivers requiring 0-10V control, performance and compatibility cannot be guaranteed by Lutron. Products following the IEC Standard 60929 are more likely to provide acceptable performance results. Determination of result acceptability is up to the user's discretion.

If using untested, non-Lutron LED drivers requiring phase control, performance and compatibility cannot be guaranteed by Lutron. A-Series or ELV products providing high end and low end trim adjustments are more likely to provide acceptable performance results. Determination of result acceptability is up to the user's discretion.

WIRING LEGEND:

△Q QS CONTROL LINK (SEE WIRE DESCRIPTION BELOW)

▲Q QS CONTROL LINK (SEE WIRE DESCRIPTION BELOW) (CONNECT WIRES 1, 3 AND 4. DO NOT CONNECT WIRE # 2)

QS WIRING AS REQUIRED BY CONTROL LINK LENGTH (REFER TO QS SMART PANEL POWER SUPPLY WIRING GUIDE FOR SHADE WIRING NOTES):

TOTAL CONTROL LINK LENGTH	Wire Gauge	AVAILABLE FROM LUTRON IN ONE CABLE:
LESS THAN 500ft (153 m)	POWER (TERMINALS 1&2): 1 PAIR 18 AWG (1.0 mm²)	GRX-CBL-346S OR GRX-PCBL-346S
	DATA (TERMINALS 3&4): 1 PAIR 22 AWG (0.5 mm²), TWISTED AND SHIELDED*	
500ft (153 m) TO 2,000ft (600 m)**	POWER (TERMINALS 1&2): 1 PAIR 12 AWG (4 mm²)	GRX-CBL-46L OR GRX-PCBL-46L
	DATA (TERMINALS 3&4): 1 PAIR 22 AWG (0.5 mm²), TWISTED AND SHIELDED*	

*ALTERNATE DATA-ONLY CABLE: USE APPROVED DATA LINK CABLE (22 AWG [0.5 mm²] TWISTED/SHIELDED) FROM BELDEN (MODEL # 9461).

**TOTAL LENGTH OF THE QS LINK MUST NOT EXCEED 2,000 ft (600 m).

▽P PANEL LINK (SEE WIRE DESCRIPTION BELOW)

▼P PANEL LINK (SEE WIRE DESCRIPTION BELOW) (CONNECT WIRES 1, 2, 3 AND 4. DO NOT CONNECT WIRE # 5)

LUTRON CABLE GRX-CBL-46L (5 CONDUCTOR NON-PLENUM) OR GRX-PCBL-46L (5 CONDUCTOR PLENUM RATED). OTHERWISE USE 2 #12 AWG (4 mm²), 1 BELDEN #9461 AND BETWEEN PANELS ADD 1 #18 AWG (1.0 mm²) FOR EMERGENCY SENSING CABLE BY OTHERS.

□ INPUT POWER (NORMAL)

◪ INPUT POWER (NORMAL-EMERGENCY)

● 2 #12AWG (4 mm²)

○ 3 #12AWG (4 mm²)

◆ 0-10V SIGNAL: 2 #18AWG (1.0 mm²)

●● 2 #18AWG (1.0 mm²)

∞ 3 #18AWG (1.0 mm²)

[E] CAT5E OR BETTER CABLE FOR LUTRON NETWORK TERMINATED WITH RJ45 CONNECTORS (TO BE PROVIDED BY OTHERS). 328 ft (100 m) MAXIMUM RUN.

1-WAY RF COMMUNICATION

2-WAY RF COMMUNICATION

LUTRON NOTES:

Architect to verify quantity, location & finish of all controls.

All faceplates, dimmers, switches, receptacles & cable/phone jacks to be Lutron NOVA T*

Lutron Field Service commissioning included in all systems initiates an 2 year limited warranty. The electrical contractor must contact Lutron (800-523-9466) to set up visit with 10 days notice.

WIRING NOTES:

QS LINK RULES:
THE FOLLOWING LINK RULES MUST BE OBSERVED FOR PROPER OPERATION:

- THIS IS A TOPOLOGY-FREE LINK (T-TAP, HOME-RUN, ETC. IS OK); REFER TO TABLE BELOW FOR WIRE RUN LIMITS.
- IF WIRED DIFFERENTLY THAN WHAT IS SHOWN, POWER DRAW UNIT REQUIREMENTS NEED TO BE CONFIRMED; SEE POWER DRAW UNITS (PDUs) SPECIFICATION SHEET INCLUDED IN THIS SUBMITTAL.
- MAXIMUM OF 512 OUTPUTS (BALLASTS, SHADES, CONTACT CLOSURES, ETC).
- MAXIMUM OF 100 OCCUPANCY SENSORS, 100 DAYLIGHT SENSORS/RADIO SHADOW SENSORS AND 100 KEYPADS.
- MAXIMUM OF 100 QS DEVICES (SUCH AS A GRAFIK EYE® QS, SEETOUCH® QS KEYPAD, SMART PANEL POWER SUPPLY [QSPS-Px-10-60], ESN, OR SIVOIA® QS SHADE / DRAPERY DRIVE UNIT), QUANTUM PROCESSOR COUNTS AS 1 DEVICE PER LINK.
- MAXIMUM OF 100 ZONES - SUCH AS A SIVOIA QS SHADE / DRAPERY DRIVE UNIT, OR A LIGHTING ZONE ON A GRAFIK EYE QS (DOES NOT APPLY TO QUANTUM SYSTEMS).
- THE 10 OUTPUTS ON A QSPS-Px-10-60 CANNOT EXCEED A COMBINED LENGTH OF 2,000 ft (600 m).

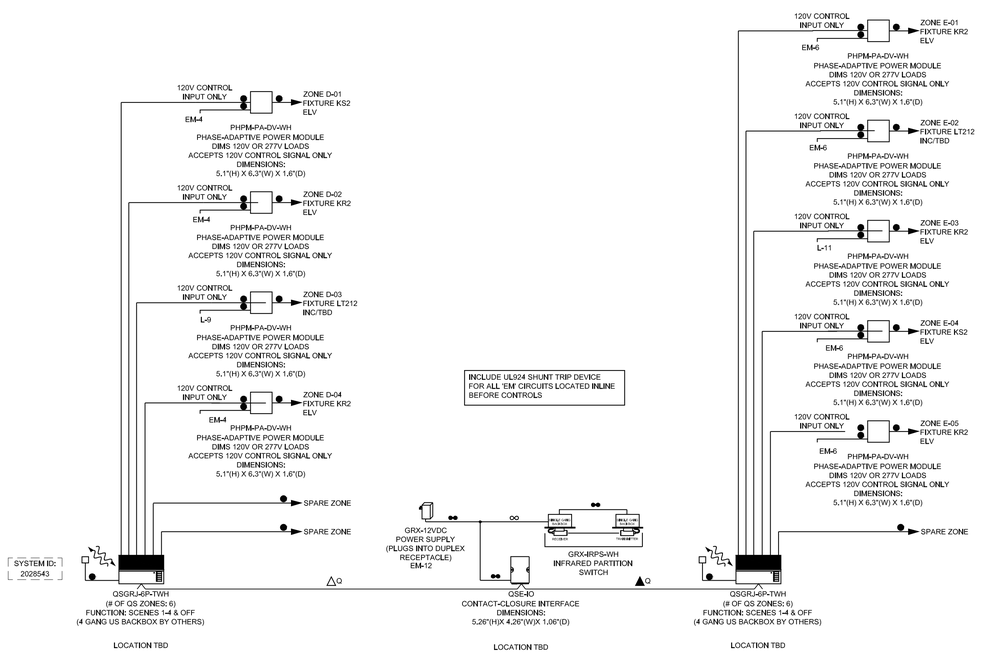

MEETING ROOMS 1A & 1B

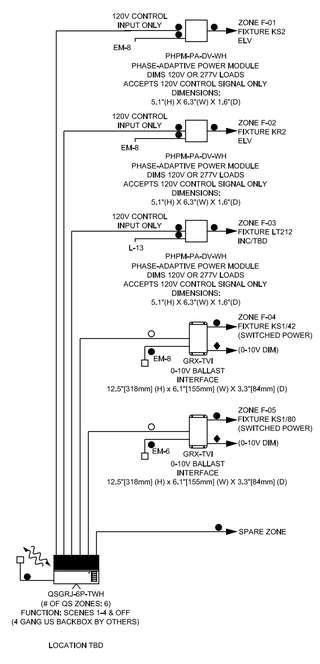

MEETING ROOM 2

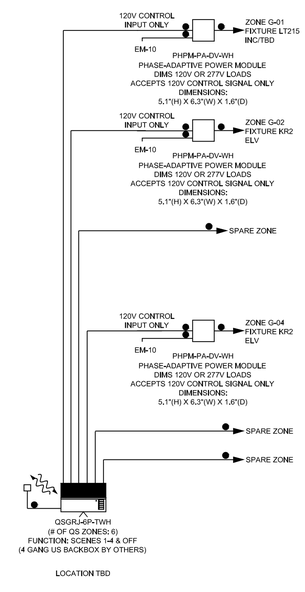

BOARD ROOM

Reviewed for Code Compliance Inspections Division Approved with Conditions

Date: 01/22/14

Prepared For:
119 Development, LLC
P.O. Box 7468
Portland, ME 04112

Consultant:
CHS ENGINEERING
CONSTANCE HICKEY SCOTT, PE
7846 WOOD OAK COVE
CORDOVA, TN 38016
TEL: (901) 830-5300
EMAIL:chsscott@chsengineering.com

Architect:
ARCHETYPE Architects
48 Union Wharf Portland, Maine 04101
(207) 772-6022 Fax (207) 772-4056

Project:
PRESS HOTEL
390 CONGRESS STREET
PORTLAND, ME 04101

Revisions:

1	13_10-14	Issue for Bid & Marriott Rev-w
2	13_10-21	Addendum #2
3	13_10-31	Addendum #3

Scale: As indicated

Date: 23 OCT 13

DIMMING CONTROL PANELS AND SCHEDULES

E4.03