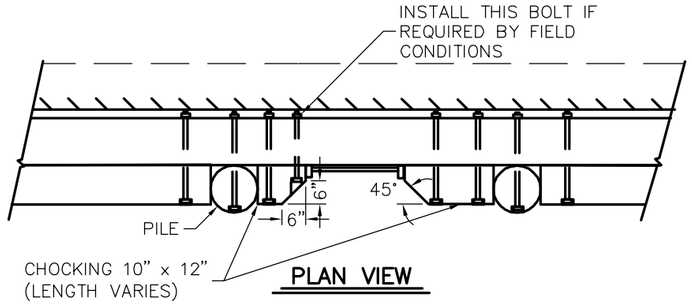

PLAN VIEW

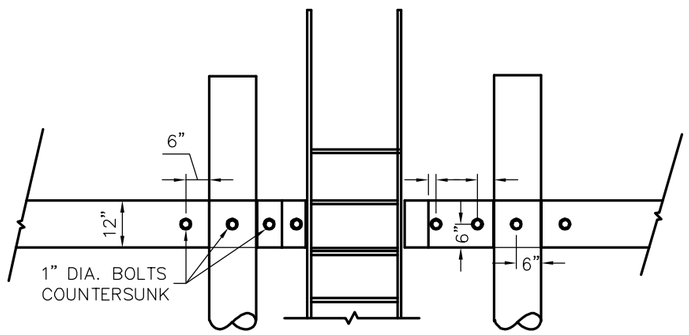

ELEVATION VIEW

WALE TO CHOCKING AT LADDER

NTS

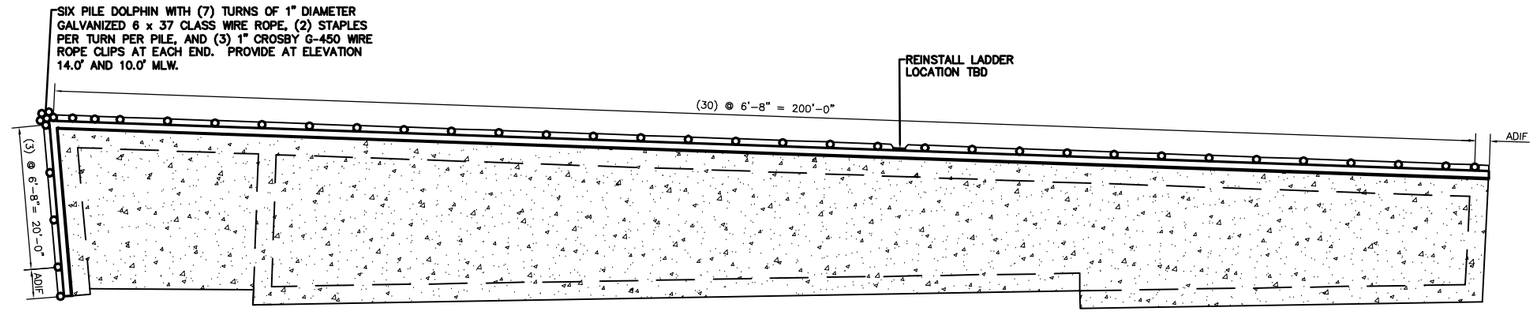

FENDER PILE PLAN

SEE GRAPHIC

0 20 40 Feet

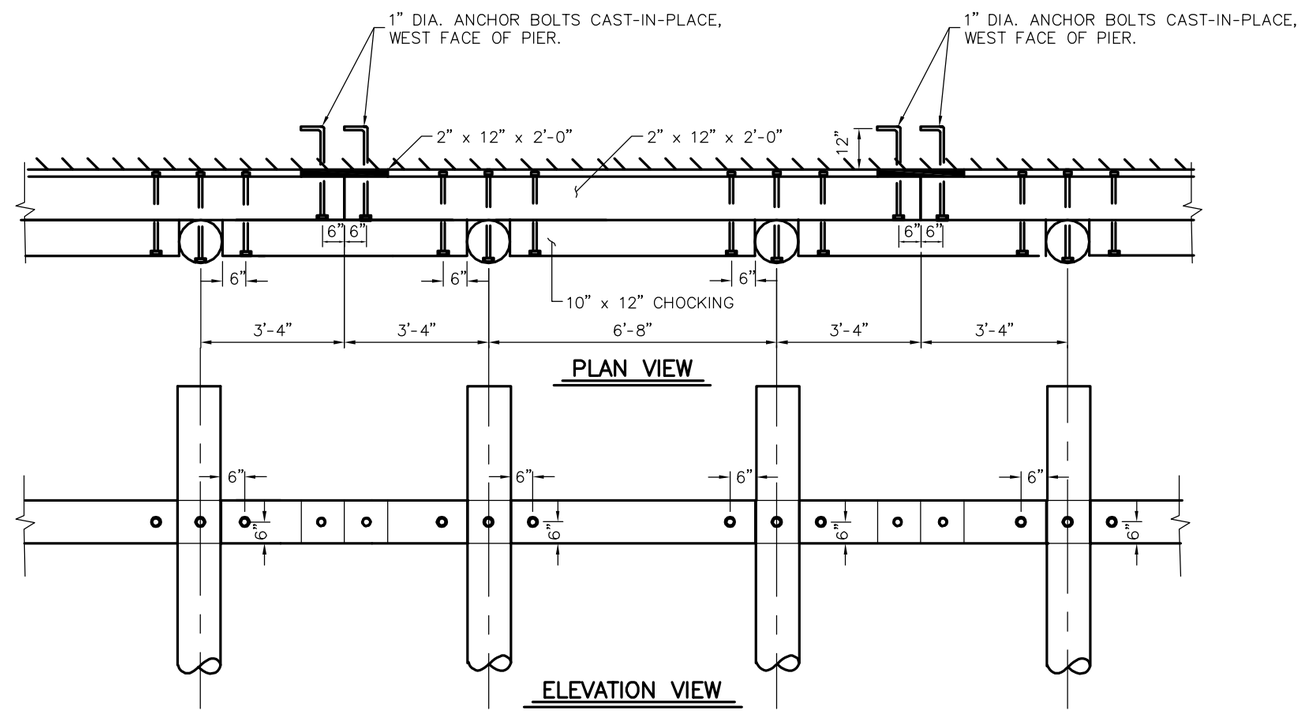

PLAN VIEW

ELEVATION VIEW

FENDER DETAIL

NTS

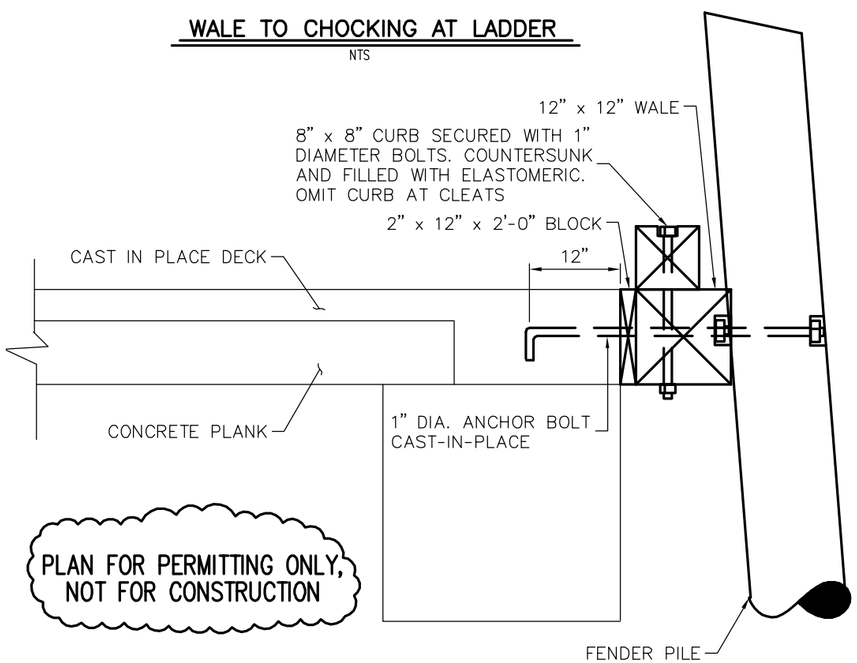

PLAN FOR PERMITTING ONLY, NOT FOR CONSTRUCTION

PILE/WALE TO PIER

NTS

PROPRIETORS OF UNION WHARF PORTLAND, MAINE	TEC ASSOCIATES CONSULTING ENGINEERS 46 SAWYER STREET SOUTH PORTLAND, MAINE 04106			
UNION WHARF PIER REPAIR FENDERING PLAN	SCALE SEE GRAPHIC		DATE 1/13/2017	
	JOB NUMBER 15165-1	DRAWN BY JDL & GWA	DESIGNED BY GWA	DRAWING. NO. 8