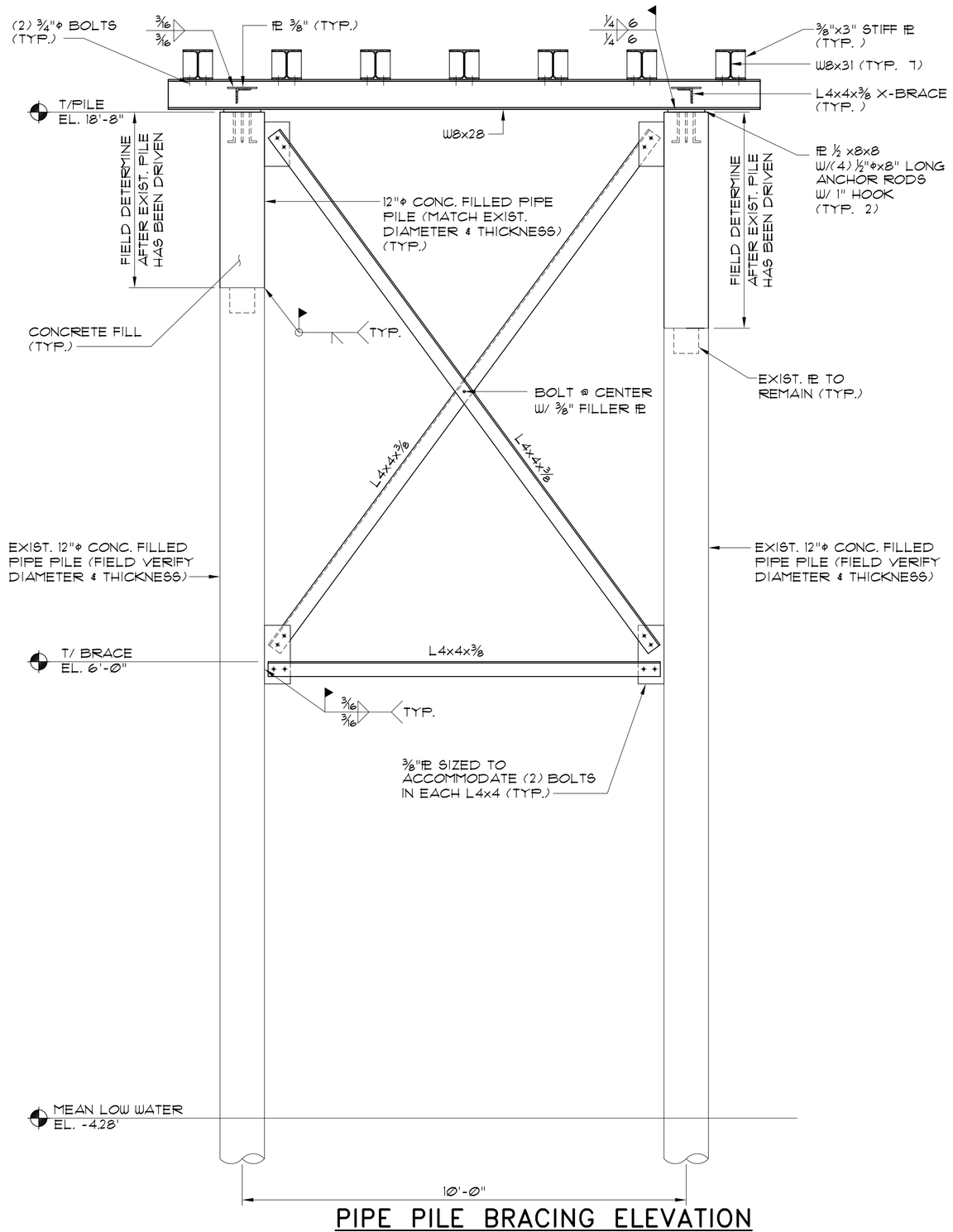

PIPE PILE BRACING ELEVATION
½"=1'-0"

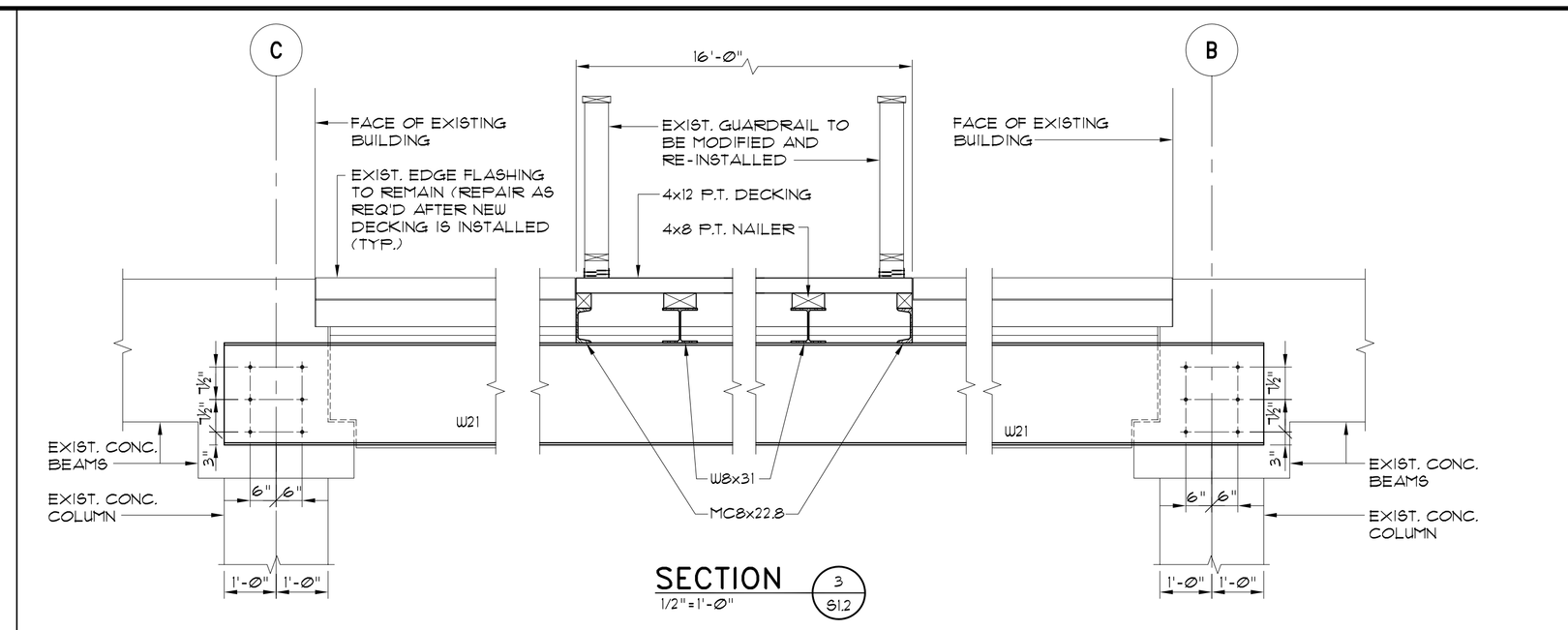

SECTION 3/S1.2
1/2"=1'-0"

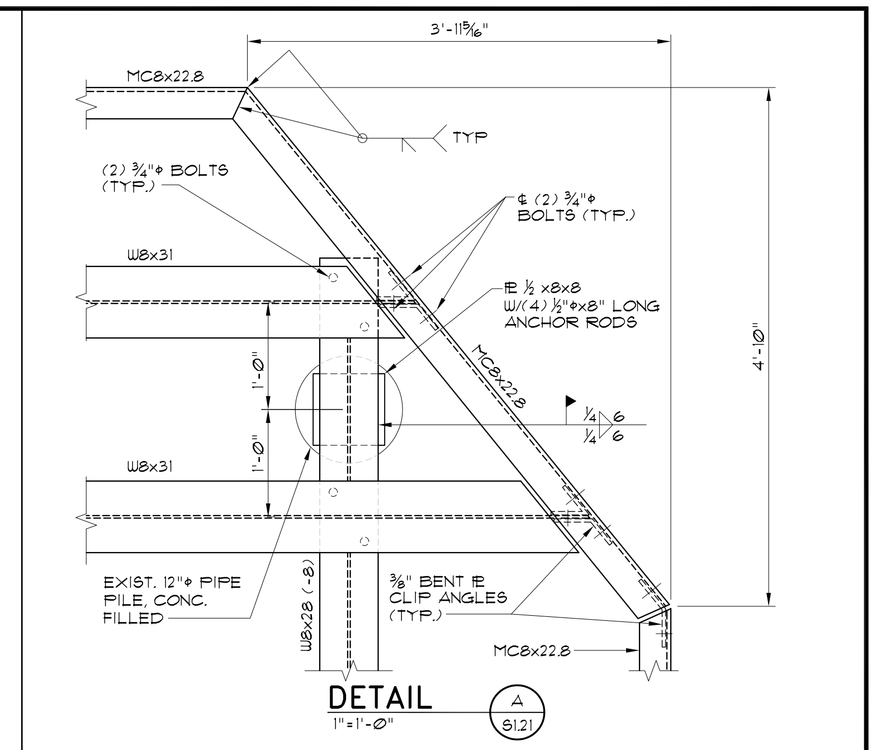

DETAIL A/S1.2
1"=1'-0"

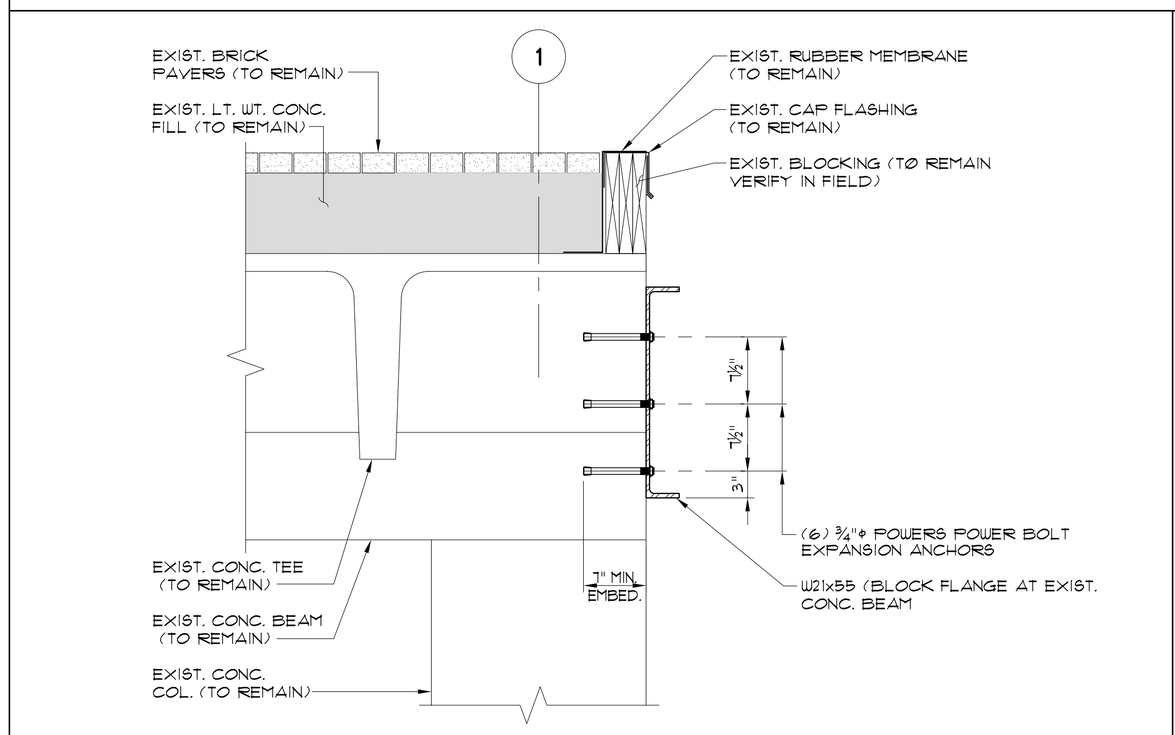

SECTION 4/S1.1
1"=1'-0"

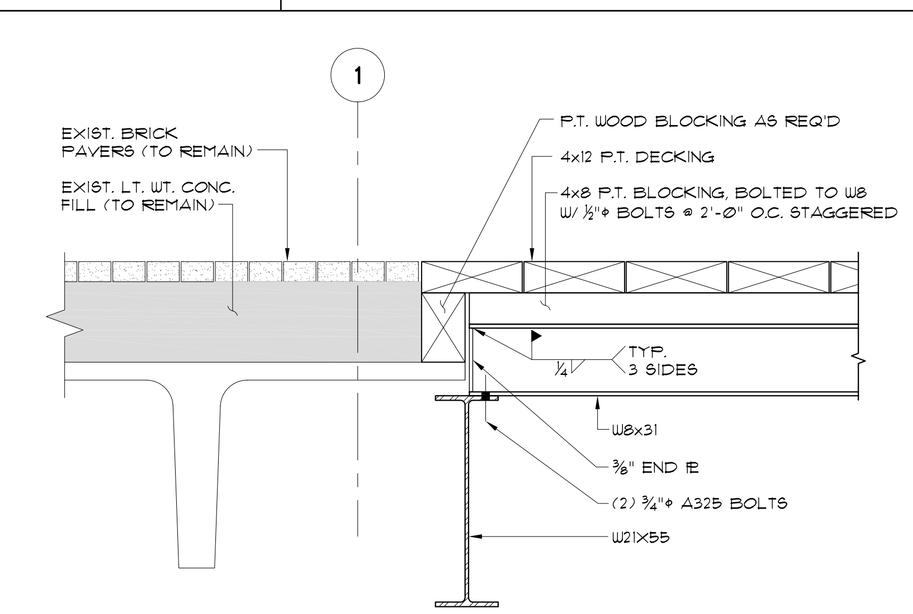

SECTION 5/S1.1
1"=1'-0"

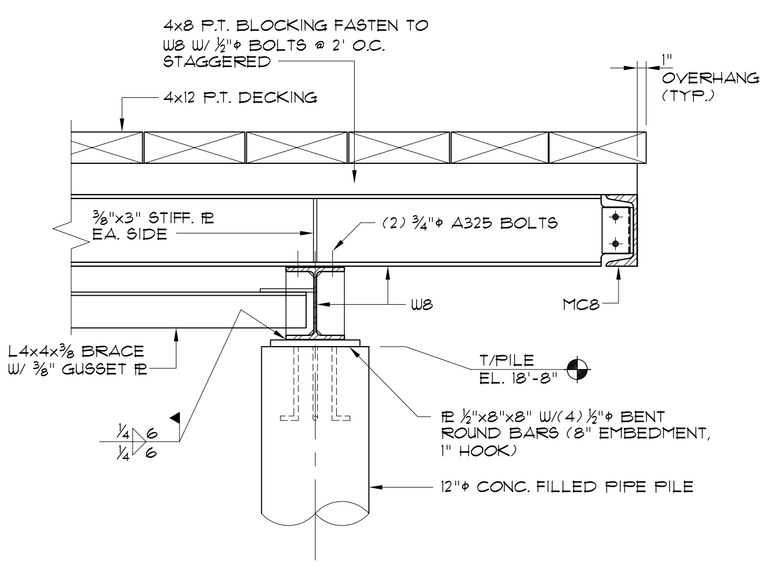

SECTION 6/S1.1
1"=1'-0"

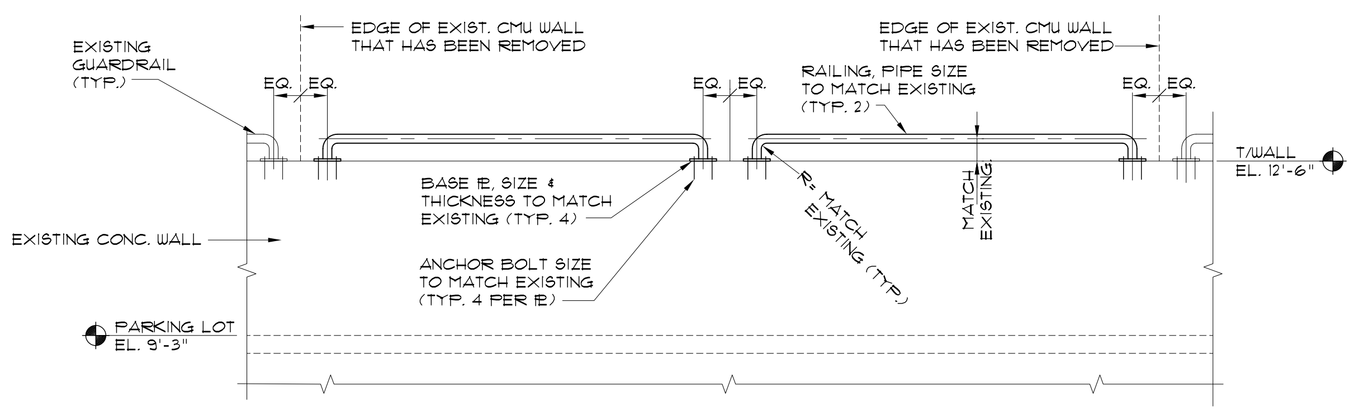

TYPICAL NEW GUARDRAIL ELEVATION
½"=1'-0"

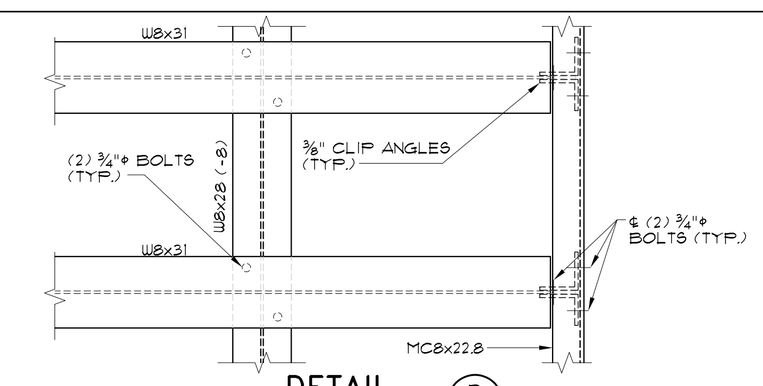

DETAIL B/S1.1
1"=1'-0"

REV.	DATE	DESCRIPTION

PINKHAM & GREER
CONSULTING ENGINEERS
28 VANNAH AVENUE
PORTLAND, MAINE

STATE OF MAINE
JAMES A. MORAN III
No. 4587
LICENSED
PROFESSIONAL ENGINEER
11-05-12

DIRIGO MANAGEMENT COMPANY
PORTLAND, MAINE

CHANDLERS WHARF CONDOMINIUMS
PORTLAND, MAINE

OVERLOOK DECK PROJECT
SECTIONS & DETAILS

SCALE:	AS SHOWN	DRN BY:	MJB
DATE:	NOVEMBER 5, 2012	DESG BY:	JAM III
PROJECT:	12312	CHK BY:	JAM III

S1.2