HOOD INFORMATION – Job#2297387

HOOD NO.	TAG	MODEL	LENGTH	MAX. COOKING TEMP.	EXHAUST PLENUM TOTAL EXH. CFM	RISER(S) WIDTH	LENG.	DIA.	CFM	S.P.	TOTAL SUPPLY CFM	HOOD CONSTRUCTION	HOOD CONFIG. END TO END	ROW
1	CHAR/RANGE (#67)	6030	11' 11.00"	600 Deg.	3575	10"	17"		1787	-0.777"	2753	430 SS	ALONE	ALONE
		ND-2-PSP-F				10"	17"		1787	-0.777"		100%		
2	BRAISING/RANGE (#62)	6030	13' 11.00"	600 Deg.	3131	10"	15"		1565	-0.612"	2818	430 SS	ALONE	ALONE
		ND-2-PSP-F				10"	15"		1565	-0.612"		100%		
3	FRYER (#61)	S430	10' 0.00"	450 Deg.	2250	10"	21"		2250	-0.716"	1912	430 SS	ALONE	ALONE
		ND-2-PSP-F										100%		
4	RANGE / COMBI (#45B)	6030	14' 5.00"	600 Deg.	2883	10"	13"		1441	-0.569"	2595	430 SS	ALONE	FRONT
		ND-2-PSP-F				10"	13"		1441	-0.569"		100%		
5	RANGE / DECK (#45A)	6030	13' 5.00"	600 Deg.	2683	10"	12"		1341	-0.536"	2415	430 SS	ALONE	FRONT
		ND-2-PSP-F				10"	12"		1341	-0.536"		100%		

HOOD INFORMATION

HOOD NO.	TAG	FILTER(S) TYPE	QTY.	HEIGHT	LENGTH	EFFICIENCY @ 9 MICRONS	LIGHT(S) QTY.	TYPE	WIRE GUARD	UTILITY CABINET(S) LOCATION	FIRE SYSTEM TYPE	SIZE	ELECTRICAL MODEL #	SWITCHES QUANTITY	FIRE SYSTEM PIPING	HOOD HANGING WGHT
1	CHAR/RANGE (#67)	Captrate Solo Filter	9	20"	16"	93% See Filter Spec.	4	Screw In 12W LED	NO	Left	CORE Protection	0	DCV-1111	1 Light 1 Fan	YES	1051 LBS
2	BRAISING/RANGE (#62)	Captrate Solo Filter	10	20"	16"	93% See Filter Spec.	4	Screw In 12W LED	NO						YES	1021 LBS
3	FRYER (#61)	Captrate Solo Filter	7	20"	16"	93% See Filter Spec.	3	Screw In 12W LED	NO	Left					YES	751 LBS
4	RANGE / COMBI (#45B)	Captrate Solo Filter	10	20"	16"	93% See Filter Spec.	5	Screw In 12W LED	NO	Right	CORE Protection	0	DCV-1111	1 Light 1 Fan	YES	1159 LBS
5	RANGE / DECK (#45A)	Captrate Solo Filter	10	20"	16"	93% See Filter Spec.	4	Screw In 12W LED	NO	Left					YES	1077 LBS

HOOD OPTIONS

HOOD NO.	TAG	OPTION
1	CHAR/RANGE (#67)	FIELD WRAPPER 18.00" High Front, Left
		BACKSPLASH 80.00" High X 156.00" Long 430 SS Vertical
		RIGHT SIDESPLASH 80.00" High X 60.00" Long 430 SS Vertical
		RIGHT END STANDOFF (FINISHED) 1" Wide 60" Long Insulated
		BACKSPLASH - INSIDE CORNER 80.00" High X 2.00" Leg Length 430 SS Vertical
		WC-CORE PROTECTION
		LEFT VERTICAL END PANEL 27" Top Width, 21" Bottom Width, 80" High Insulated 430 SS
2	BRAISING/RANGE (#62)	FIELD WRAPPER 18.00" High Front, Left, Right
		BACKSPLASH 80.00" High X 168.00" Long 430 SS Vertical
		LEFT SIDESPLASH 80.00" High X 60.00" Long 430 SS Vertical
		LEFT END STANDOFF (FINISHED) 1" Wide 60" Long Insulated
		BACKSPLASH - INSIDE CORNER 80.00" High X 2.00" Leg Length 430 SS Vertical
		LEFT QUARTER END PANEL 23" Top Width, 0" Bottom Width, 23" High 430 SS
		STRUCTURAL FRONT PANEL
		WC-CORE PROTECTION
		RIGHT VERTICAL END PANEL 27" Top Width, 21" Bottom Width, 80" High Insulated 430 SS
3	FRYER (#61)	FIELD WRAPPER 18.00" High Front, Left, Right
		BACKSPLASH 80.00" High X 132.00" Long 430 SS Vertical
		RIGHT QUARTER END PANEL 23" Top Width, 0" Bottom Width, 23" High 430 SS
		LEFT QUARTER END PANEL 23" Top Width, 0" Bottom Width, 23" High 430 SS
		STRUCTURAL FRONT PANEL
		WC-CORE PROTECTION
4	RANGE / COMBI (#45B)	FIELD WRAPPER 18.00" High Front, Right
		LEFT SIDESPLASH 80.00" High X 60.00" Long 430 SS Vertical
		LEFT END STANDOFF (FINISHED) 1" Wide 60" Long Insulated
		LEFT QUARTER END PANEL 23" Top Width, 0" Bottom Width, 23" High 430 SS
		STRUCTURAL FRONT PANEL
		WC-CORE PROTECTION
		RIGHT VERTICAL END PANEL 27" Top Width, 21" Bottom Width, 80" High Insulated 430 SS
5	RANGE / DECK (#45A)	FIELD WRAPPER 18.00" High Front, Left
		RIGHT SIDESPLASH 80.00" High X 60.00" Long 430 SS Vertical
		RIGHT END STANDOFF (FINISHED) 1" Wide 60" Long Insulated
		STRUCTURAL FRONT PANEL
		WC-CORE PROTECTION
		RIGHT VERTICAL END PANEL 27" Top Width, 21" Bottom Width, 80" High Insulated 430 SS
		LEFT VERTICAL END PANEL 27" Top Width, 21" Bottom Width, 80" High Insulated 430 SS
		SENSOR-CV MOUNT SENSOR(S) IN HOOD CAPTURE VOLUME

PERFORATED SUPPLY PLENUM(S)

HOOD NO.	TAG	POS.	LENGTH	WIDTH	HEIGHT	TYPE	RISER(S) WIDTH	LENG.	DIA.	CFM	S.P.
1	CHAR/RANGE (#67)	Front	156"	20"	6"	MUA	12"	28"		688	0.179"
						MUA	12"	28"		688	0.179"
						MUA	12"	28"		688	0.179"
						MUA	12"	28"		688	0.179"
2	BRAISING/RANGE (#62)	Front	168"	20"	6"	MUA	12"	28"		704	0.187"
						MUA	12"	28"		704	0.187"
						MUA	12"	28"		704	0.187"
						MUA	12"	28"		704	0.187"
3	FRYER (#61)	Front	132"	18"	6"	MUA	8"	36"		637	0.181"
						MUA	8"	36"		637	0.181"
						MUA	8"	36"		637	0.181"
4	RANGE / COMBI (#45B)	Front	186"	18"	6"	MUA	12"	28"		648	0.160"
						MUA	12"	28"		648	0.160"
						MUA	12"	28"		648	0.160"
						MUA	12"	28"		648	0.160"
5	RANGE / DECK (#45A)	Front	174"	18"	6"	MUA	12"	28"		805	0.208"
						MUA	12"	28"		805	0.208"
						MUA	12"	28"		805	0.208"

SPECIFICATION: CAPTRATE® GREASE-STOP® SOLO FILTER

THE CAPTRATE GREASE-STOP SOLO FILTER IS A SINGLE-STAGE FILTER FEATURING A UNIQUE S-BAFFLE DESIGN IN CONJUNCTION WITH A SLOTTED REAR BAFFLE DESIGN, TO DELIVER EXCEPTIONAL FILTRATION EFFICIENCY.

FILTER IS STAINLESS STEEL CONSTRUCTION, AND SIZED TO FIT INTO STANDARD 2-INCH DEEP HOOD CHANNEL(S).

UNITS SHALL INCLUDE STAINLESS STEEL HANDLES AND A FASTENING DEVICE TO SECURE THE TWO COMPONENTS WHEN ASSEMBLED.

GREASE EXTRACTION EFFICIENCY PERFORMANCE SHALL REMOVE AT LEAST 75% OF GREASE PARTICLES FIVE MICRONS IN SIZE, AND 90% GREASE PARTICLES SEVEN MICRONS IN SIZE AND LARGER, WITH A CORRESPONDING PRESSURE DROP NOT TO EXCEED 1.0 INCHES OF WATER GAUGE.

THE CAPTRATE GREASE-STOP SOLO WAS TESTED TO ASTM STANDARD ASTM F2519-05.

FILTER COLLECTION EFFICIENCY 2" Captrate® Grease-Stop® Solo Filter

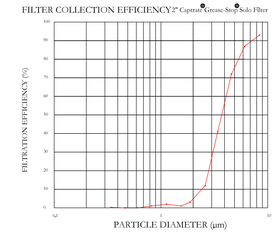

RESISTANCE VS. AIRFLOW - 2" Captrate® Grease-Stop® Solo Filter

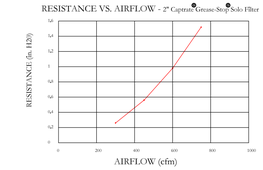

CAPTRATE FILTERS ARE BUILT IN COMPLIANCE WITH:
NFPA #96
NSF STANDARD #2
UL STANDARD #1046
INT. MECH. CODE (IMC)

NOTE: MULTIPLE HOODS WILL BE CONNECTED TO A COMMON EXHAUST FAN. ALL EXHAUST DUCTWORK NEEDS TO BE DESIGNED FOR PROPER AIRFLOW FROM EACH HOOD. NO BALANCING DAMPERS ARE ALLOWED IN DUCT SYSTEM.

ND-2 VERTICAL ENDPANEL

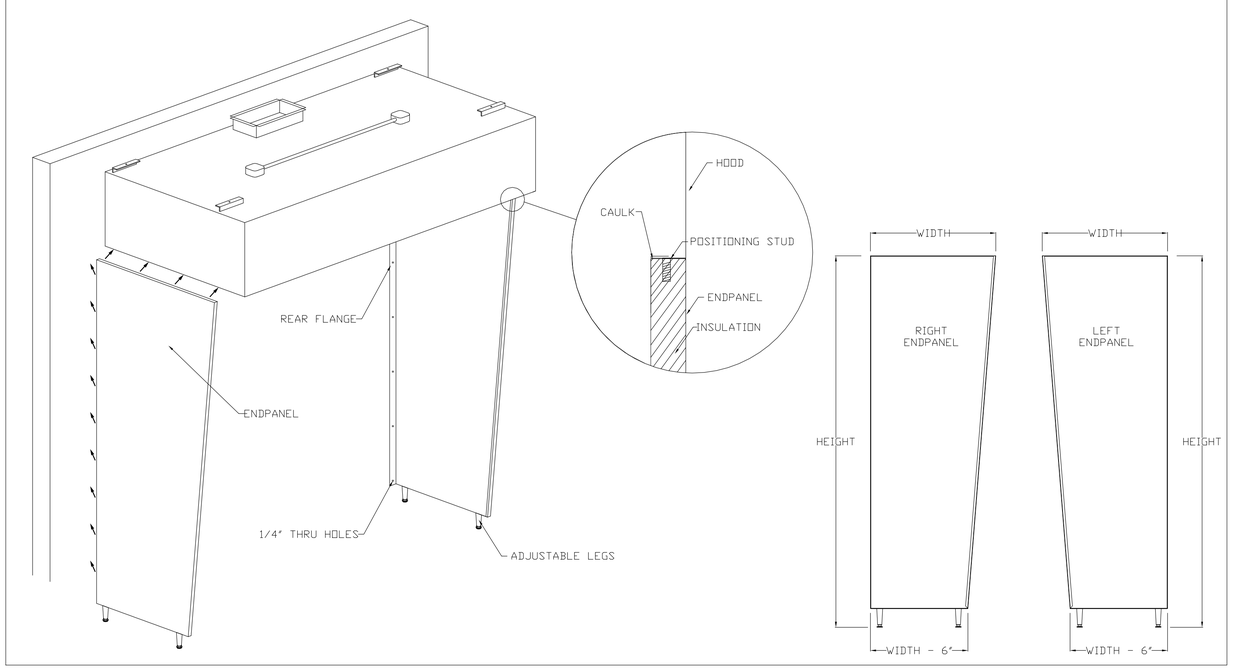

Reviewed for Code Compliance
Inspections Division
Approved with Conditions
Date: 08/19/15

CAPTIVEAIRE
www.captiveaire.com
MAINE OFFICE
PO Box 86, 179 South Rd., Topsfield, ME, 04490 PHONE: (207) 795-2590 FAX: (919) 227-5946 EMAIL: reg21@captiveaire.com

Maine Wharf Restaurant R6
PORTLAND, ME, 04101

DATE: 4/29/2015
DWG.#: 2297387
DRAWN BY: BFC-21
SCALE: 3/4" = 1'-0"
MASTER DRAWING
SHEET NO. 1

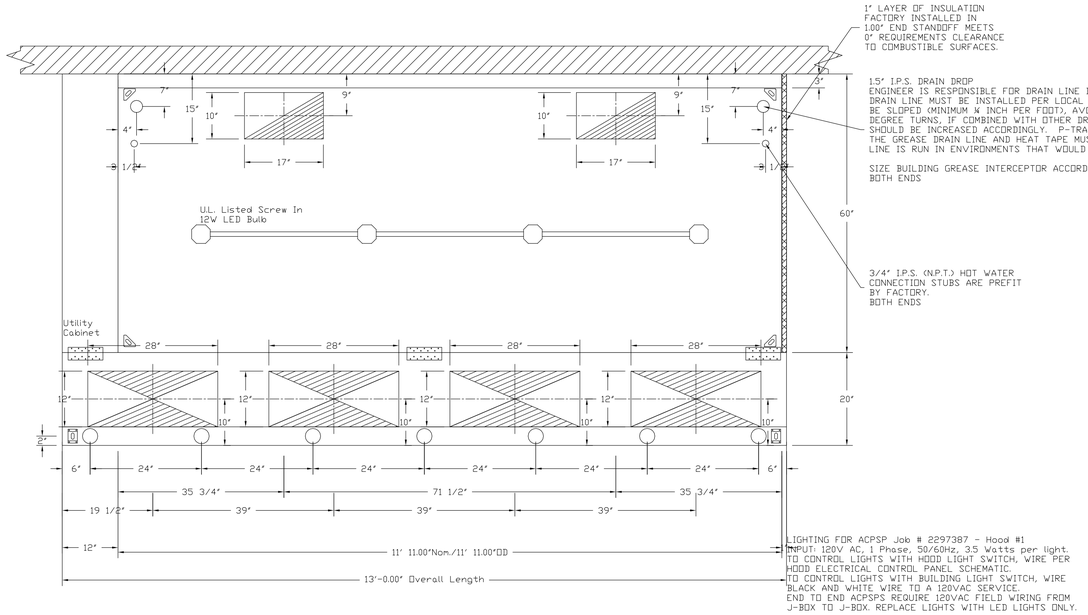

PLAN VIEW – Hood #1 (CHAR/RANGE (#67))
11' 11.00" LONG 6030ND-2-PSP-F

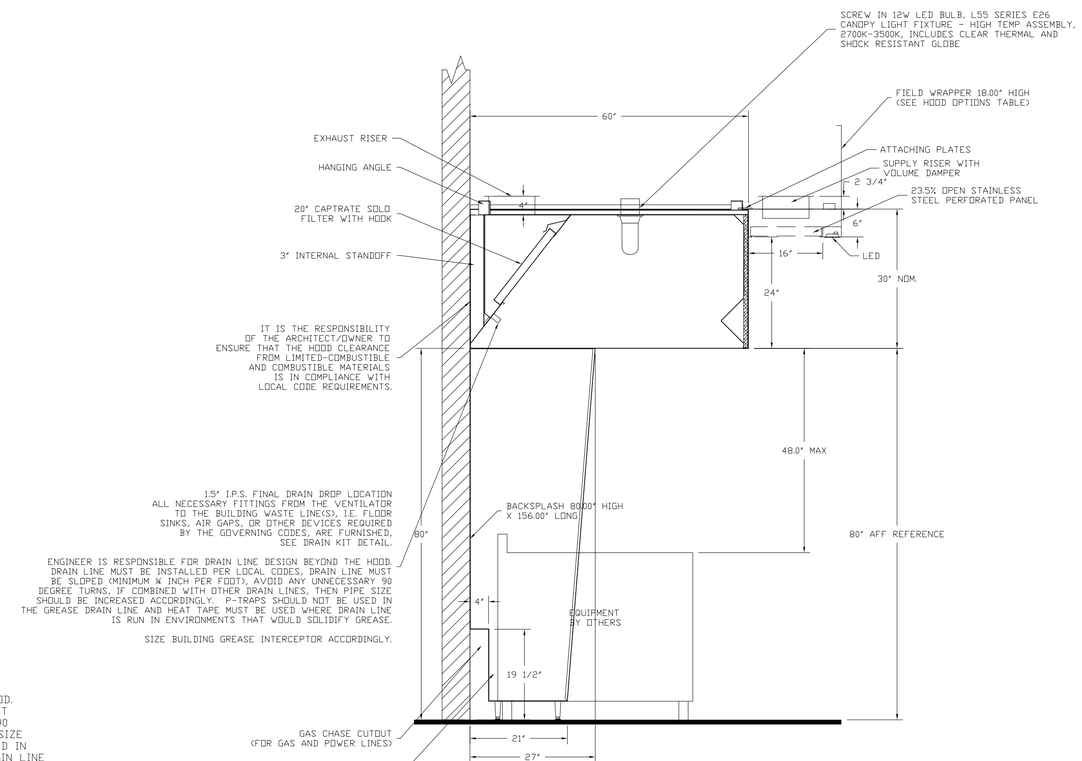

SECTION VIEW – MODEL 6030ND-2-PSP-F
HOOD – #1 (CHAR/RANGE (#67))

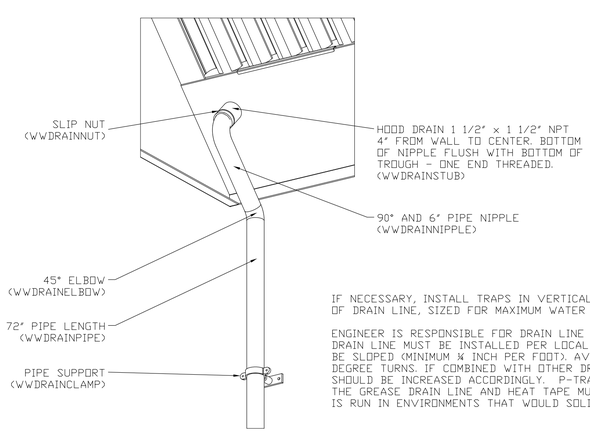

IF NECESSARY, INSTALL TRAPS IN VERTICAL SECTION
OF DRAIN LINE, SIZED FOR MAXIMUM WATER VOLUME.

ENGINEER IS RESPONSIBLE FOR DRAIN LINE DESIGN BEYOND THE HOOD.
DRAIN LINE MUST BE INSTALLED PER LOCAL CODES. DRAIN LINE MUST
BE SLOPED (MINIMUM ¼ INCH PER FOOT). AVOID ANY UNNECESSARY 90
DEGREE TURNS. IF COMBINED WITH OTHER DRAIN LINES, THEN PIPE SIZE
SHOULD BE INCREASED ACCORDINGLY. P-TRAPS SHOULD NOT BE USED IN
THE GREASE DRAIN LINE AND HEAT TAPE MUST BE USED WHERE DRAIN LINE
IS RUN IN ENVIRONMENTS THAT WOULD SOLIDIFY GREASE.

DRAIN KIT DETAIL

Reviewed for Code Compliance
Inspections Division
Approved with Conditions

Date: 08/19/15

CAPTIVEAIRE
www.captiveaire.com
MAINE OFFICE
PO Box 86, 179 South Rd., Topsfield, ME, 04490 PHONE: (207) 796-2590 FAX: (919) 227-5946 EMAIL: reg21@captiveaire.com

Maine Wharf Restaurant R6
PORTLAND, ME, 04101

DATE: 4/29/2015

DWG.#: 2297387

DRAWN BY: BFC-21

SCALE: 3/4" = 1'-0"

MASTER DRAWING

SHEET NO.
2

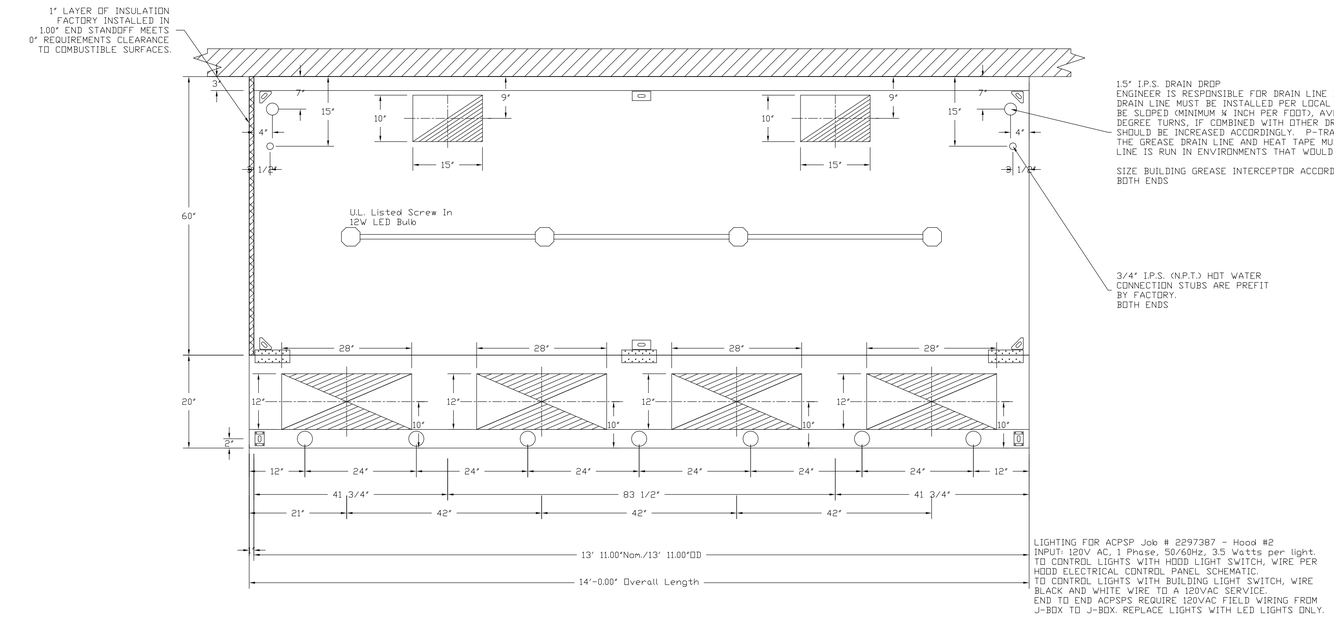

PLAN VIEW – Hood #2 (BRAISING/RANGE (#62))
13' 11.00" LONG 6030ND-2-PSP-F

NOTE: Additional hanging angles provided for hoods 12' and longer.

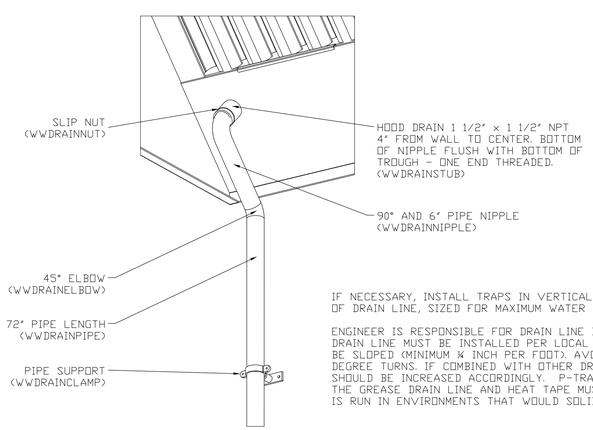

IF NECESSARY, INSTALL TRAPS IN VERTICAL SECTION OF DRAIN LINE, SIZED FOR MAXIMUM WATER VOLUME.

ENGINEER IS RESPONSIBLE FOR DRAIN LINE DESIGN BEYOND THE HOOD. DRAIN LINE MUST BE INSTALLED PER LOCAL CODES. DRAIN LINE MUST BE SLOPED (MINIMUM ¼ INCH PER FOOT). AVOID ANY UNNECESSARY 90 DEGREE TURNS. IF COMBINED WITH OTHER DRAIN LINES, THEN PIPE SIZE SHOULD BE INCREASED ACCORDINGLY. P-TRAPS SHOULD NOT BE USED IN THE GREASE DRAIN LINE AND HEAT TAPE MUST BE USED WHERE DRAIN LINE IS RUN IN ENVIRONMENTS THAT WOULD SOLIDIFY GREASE.

DRAIN KIT DETAIL

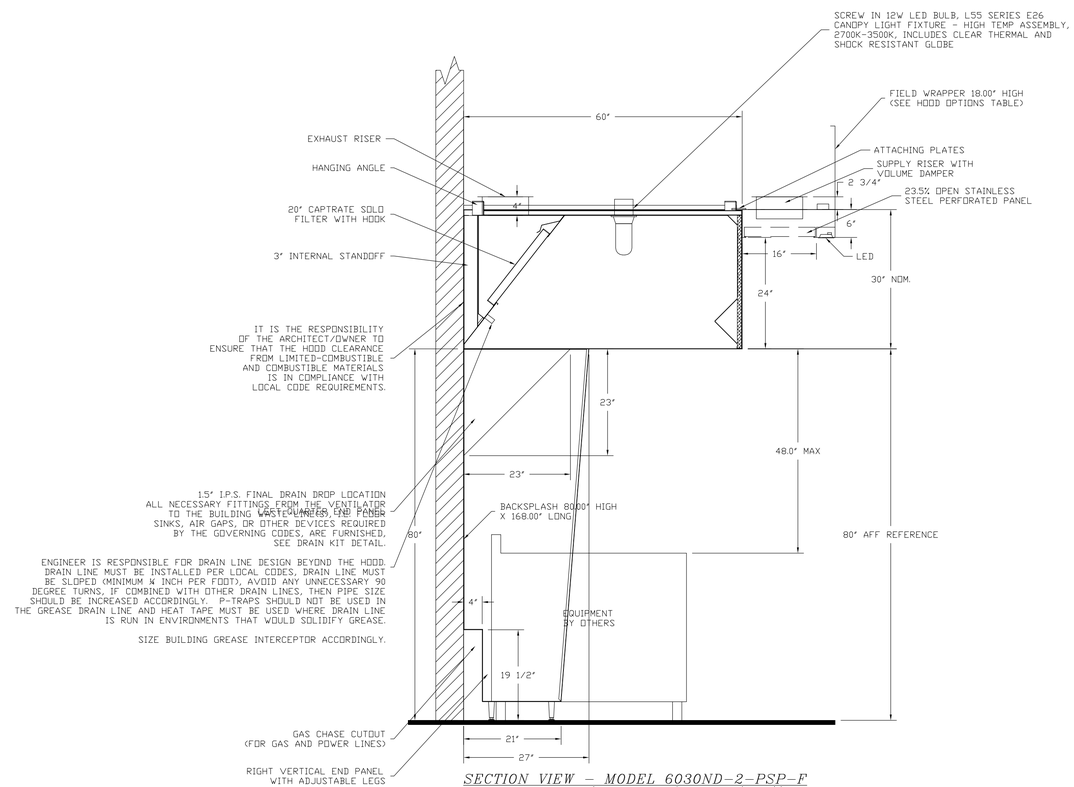

SECTION VIEW – MODEL 6030ND-2-PSP-F
HOOD – #2 (BRAISING/RANGE (#62))

Reviewed for Code Compliance
Inspections Division
Approved with Conditions

Date: 08/19/15

CAPTIVEAIRE
www.captiveaire.com
MAINE OFFICE
PO Box 86, 179 South Rd., Topsfield, ME, 04490 PHONE: (207) 796-2590 FAX: (919) 227-5946 EMAIL: reg21@captiveaire.com

Maine Wharf Restaurant R6
PORTLAND, ME, 04101

DATE: 4/29/2015

DWG.#: 2297387

DRAWN BY: BFC-21

SCALE: 3/4" = 1'-0"

MASTER DRAWING

SHEET NO. 3

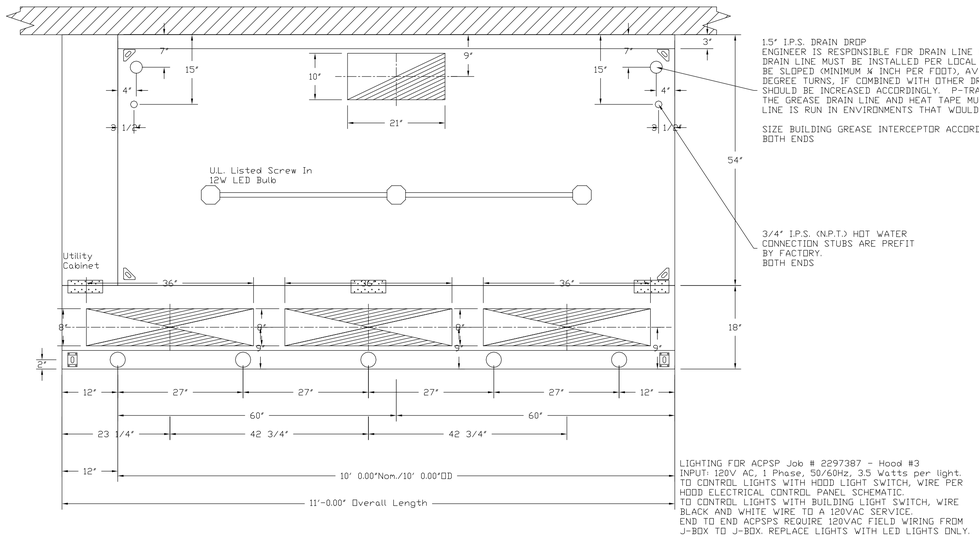

PLAN VIEW – Hood #3 (FRYER (#61))
10' 0.00" LONG 5430ND-2-PSP-F

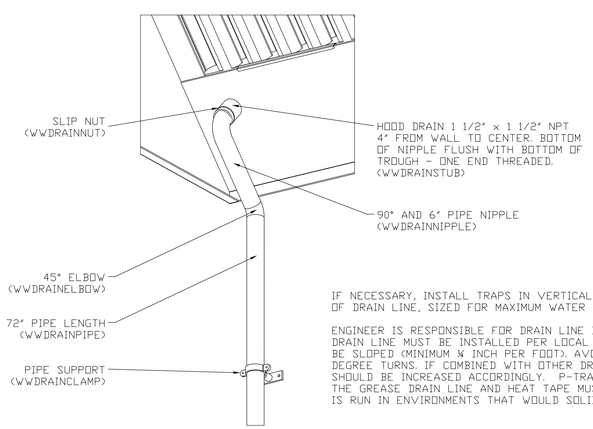

IF NECESSARY, INSTALL TRAPS IN VERTICAL SECTION OF DRAIN LINE, SIZED FOR MAXIMUM WATER VOLUME.

ENGINEER IS RESPONSIBLE FOR DRAIN LINE DESIGN BEYOND THE HOOD. DRAIN LINE MUST BE INSTALLED PER LOCAL CODES. DRAIN LINE MUST BE SLOPED (MINIMUM ¼ INCH PER FOOT). AVOID ANY UNNECESSARY 90 DEGREE TURNS. IF COMBINED WITH OTHER DRAIN LINES, THEN PIPE SIZE SHOULD BE INCREASED ACCORDINGLY. P-TRAPS SHOULD NOT BE USED IN THE GREASE DRAIN LINE AND HEAT TAPE MUST BE USED WHERE DRAIN LINE IS RUN IN ENVIRONMENTS THAT WOULD SOLIDIFY GREASE.

DRAIN KIT DETAIL

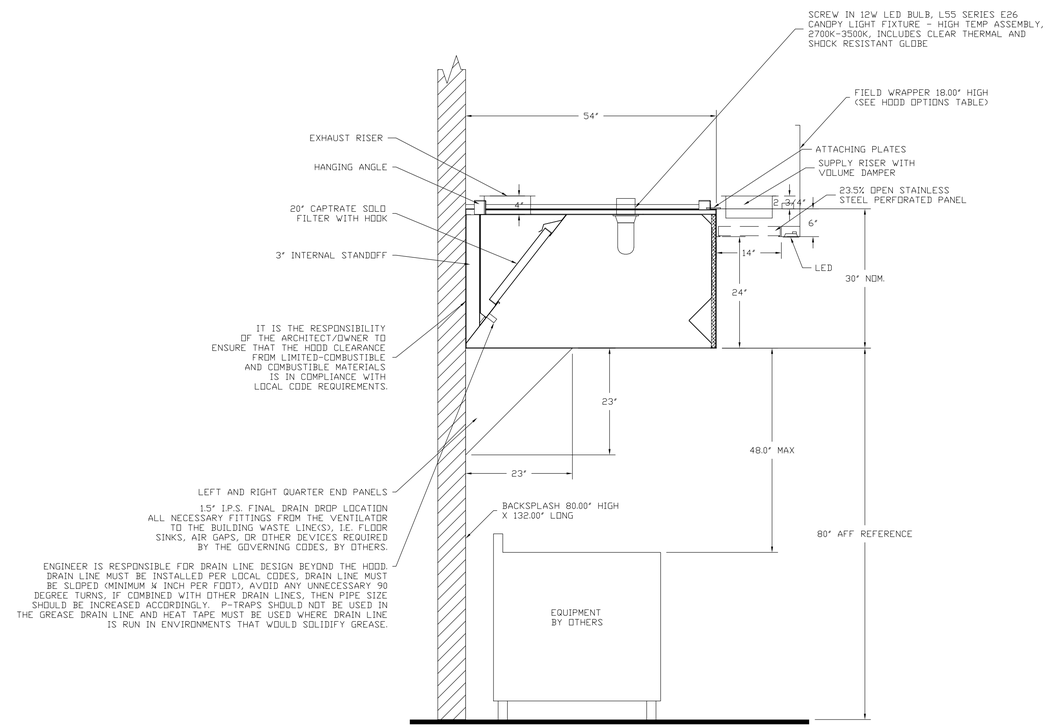

SECTION VIEW – MODEL 5430ND-2-PSP-F
HOOD – #3 (FRYER (#61))

Reviewed for Code Compliance
Inspections Division
Approved with Conditions

Date: 08/19/15

CAPTIVEAIRE
www.captiveaire.com
MAINE OFFICE
PO Box 86, 179 South Rd., Topsfield, ME, 04490 PHONE: (207) 795-2590 FAX: (919) 227-5946 EMAIL: reg21@captiveaire.com

Maine Wharf Restaurant R6
PORTLAND, ME, 04101

DATE: 4/29/2015

DWG.#: 2297387

DRAWN BY: BFC-21

SCALE: 3/4" = 1'-0"

MASTER DRAWING

SHEET NO.
4

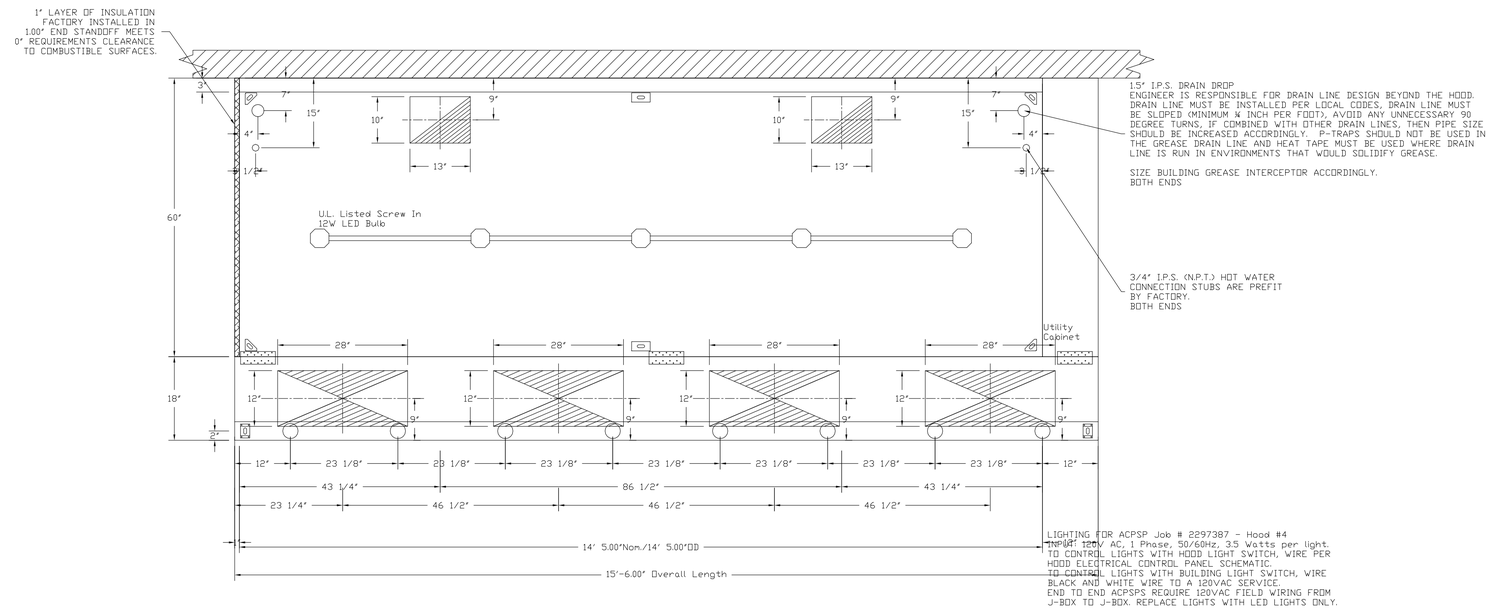

PLAN VIEW – Hood #4 (RANGE / COMBI (#45B))
14' 5.00" LONG 6030ND-2-PSP-F
NOTE: Additional hanging angles provided for hoods 12' and longer.

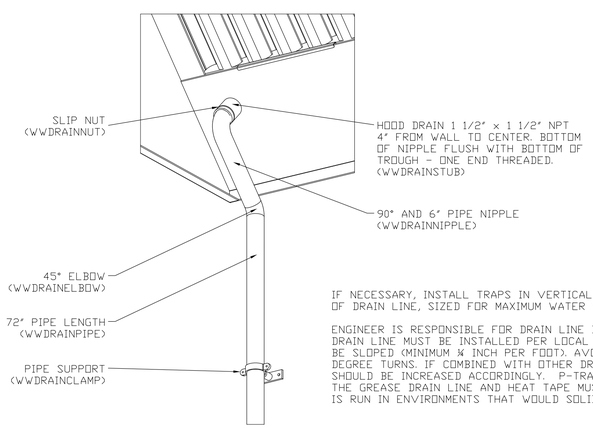

IF NECESSARY, INSTALL TRAPS IN VERTICAL SECTION OF DRAIN LINE, SIZED FOR MAXIMUM WATER VOLUME.

ENGINEER IS RESPONSIBLE FOR DRAIN LINE DESIGN BEYOND THE HOOD. DRAIN LINE MUST BE INSTALLED PER LOCAL CODES. DRAIN LINE MUST BE SLOPED (MINIMUM ¼ INCH PER FOOT). AVOID ANY UNNECESSARY 90 DEGREE TURNS. IF COMBINED WITH OTHER DRAIN LINES, THEN PIPE SIZE SHOULD BE INCREASED ACCORDINGLY. P-TRAPS SHOULD NOT BE USED IN THE GREASE DRAIN LINE AND HEAT TAPE MUST BE USED WHERE DRAIN LINE IS RUN IN ENVIRONMENTS THAT WOULD SOLIDIFY GREASE.

DRAIN KIT DETAIL

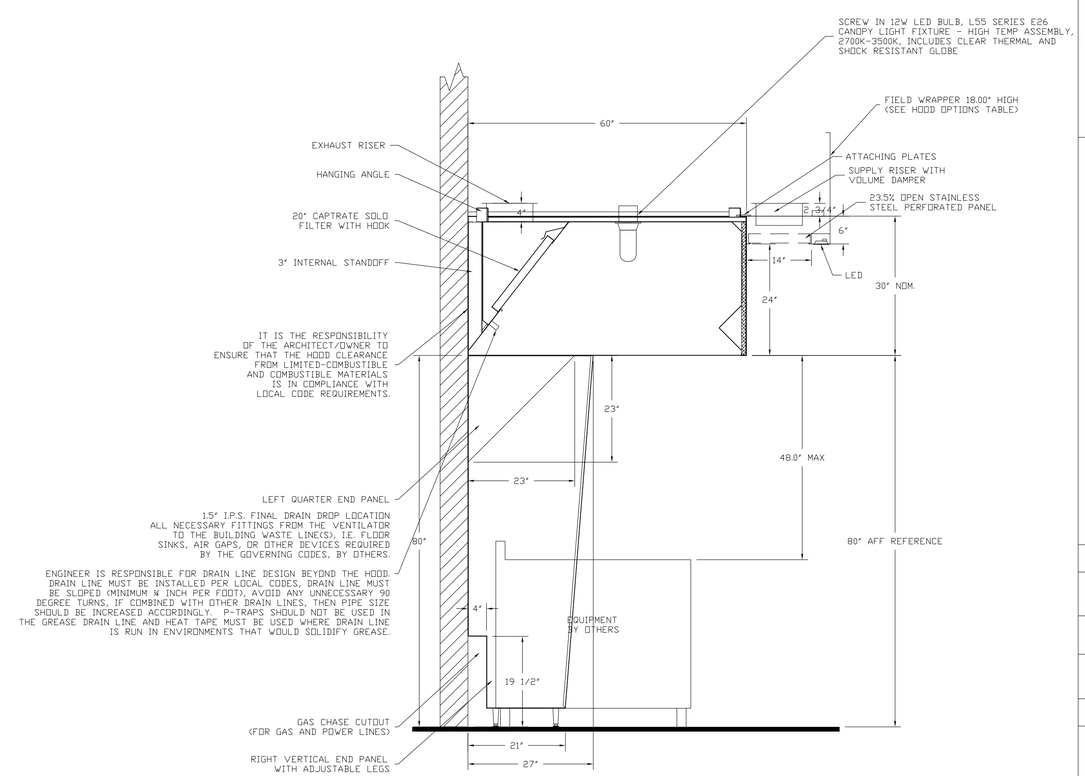

SECTION VIEW – MODEL 6030ND-2-PSP-F
HOOD – #4 (RANGE / COMBI (#45B))

Reviewed for Code Compliance
Inspections Division
Approved with Conditions

Date: 08/19/15

CAPTIVEAIRE
www.captiveaire.com
MAINE OFFICE
PO Box 86, 179 South Rd., Topsfield, ME, 04490 PHONE: (207) 796-2590 FAX: (919) 227-5946 EMAIL: reg21@captiveaire.com

Maine Wharf Restaurant R6
PORTLAND, ME, 04101

DATE: 4/29/2015

DWG.#: 2297387

DRAWN BY: BFC-21

SCALE: 3/4" = 1'-0"

MASTER DRAWING

SHEET NO. 5

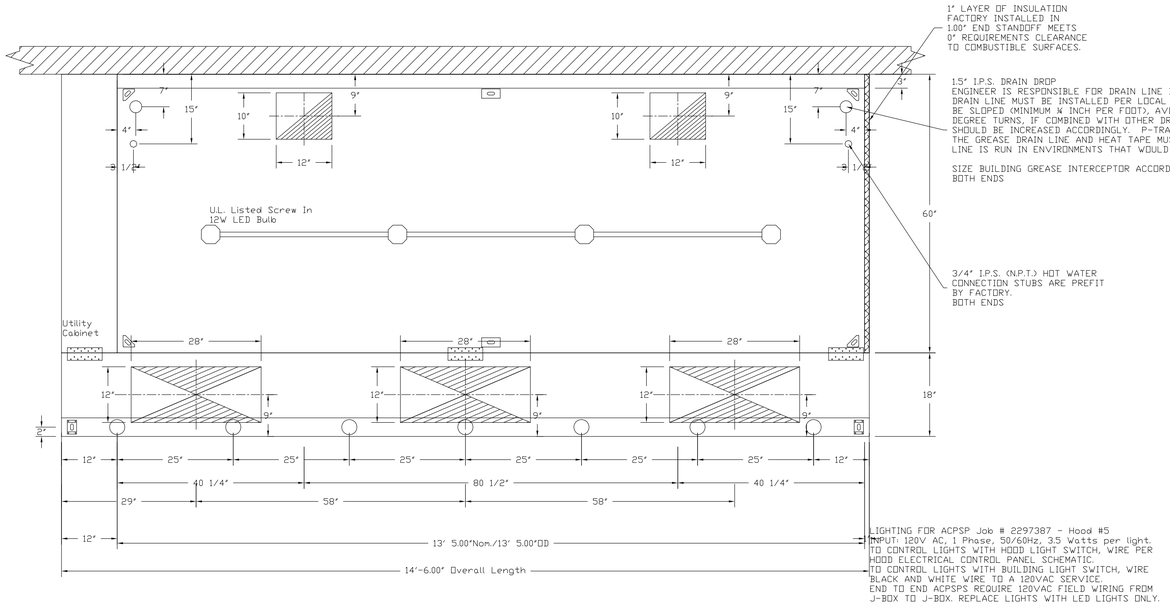

PLAN VIEW - Hood #5 (RANGE / DECK (#45A))
13' 5.00" LONG 6030ND-2-PSP-F
NOTE: Additional hanging angles provided for hoods 12' and longer.

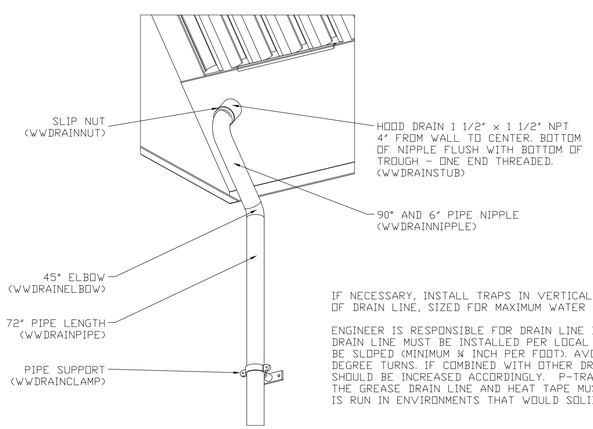

IF NECESSARY, INSTALL TRAPS IN VERTICAL SECTION
OF DRAIN LINE, SIZED FOR MAXIMUM WATER VOLUME.

ENGINEER IS RESPONSIBLE FOR DRAIN LINE DESIGN BEYOND THE HOOD.
DRAIN LINE MUST BE INSTALLED PER LOCAL CODES. DRAIN LINE MUST
BE SLOPED (MINIMUM ¼ INCH PER FOOT). AVOID ANY UNNECESSARY 90
DEGREE TURNS. IF COMBINED WITH OTHER DRAIN LINES, THEN PIPE SIZE
SHOULD BE INCREASED ACCORDINGLY. P-TRAPS SHOULD NOT BE USED IN
THE GREASE DRAIN LINE AND HEAT TAPE MUST BE USED WHERE DRAIN LINE
IS RUN IN ENVIRONMENTS THAT WOULD SOLIDIFY GREASE.

DRAIN KIT DETAIL

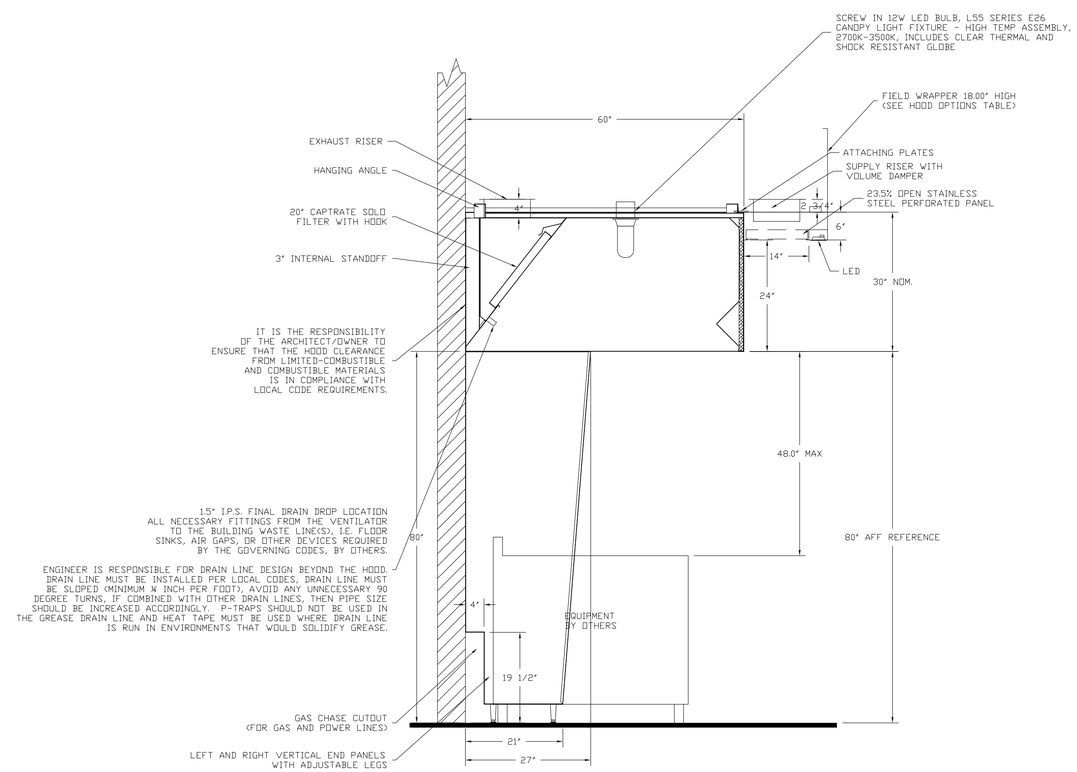

SECTION VIEW - MODEL 6030ND-2-PSP-F
HOOD - #5 (RANGE / DECK (#45A))

Reviewed for Code Compliance
Inspections Division
Approved with Conditions

Date: 08/19/15

CAPTIVEAIRE
www.captiveaire.com
MAINE OFFICE
PO Box 86, 179 South Rd., Topsfield, ME, 04490 PHONE: (207) 796-2590 FAX: (919) 227-5946 EMAIL: reg21@captiveaire.com

Maine Wharf Restaurant R6
PORTLAND, ME, 04101

DATE: 4/29/2015

DWG.#: 2297387

DRAWN BY: BFC-21

SCALE: 3/4" = 1'-0"

MASTER DRAWING

SHEET NO. 6

Fire System Information – Job#2297387

FIRE SYSTEM NO.	Tag	TYPE	SIZE	FLOW POINTS	INSTALLATION	
					SYSTEM	LOCATION ON HOOD
1		CORE Protection	0	0	Fire Cabinet Left	Left
2		CORE Protection	0	0	Fire Cabinet Right	Right

GAS VALVE(S)

FIRE SYSTEM NO.	TAG	TYPE	SIZE	SUPPLIED BY
1		SC Electrical	1.000	CaptiveAire Systems
2		SC Electrical	2.000	CaptiveAire Systems
2		SC Electrical	1.000	CaptiveAire Systems

Fire System Parts List Key

FIRE SYSTEM NO.	TAG	KEY NUMBER - PART DESCRIPTION	QTY. BY FACTORY	QTY. BY DIST.
1		0 - 0 - 100-BW 2x4 Blank Plate for J-Box	4	0
1		0 - 0 - 12-F28021-005360 Duct Fire Thermostat. NO, Close on temp rise at 360°F.	4	0
1		0 - 0 - 59361-1/2 2x4 Extension Ring	4	0
1		0 - 0 - CBI-102 Chrome Plated Pipe Fitting 3/8" NPT 45 Degree Elbow	4	0
1		0 - 0 - CBI-104 Chrome Plated Pipe Fitting 3/8" NPT Tee	4	0
1		0 - 0 - CBI-106 Chrome Plated Pipe Fitting 3/8" NPT 90 Degree Elbow	4	0
1		0 - 0 - CBI-107 Chrome Plated Pipe Fitting 3/8" NPT Union	4	0
1		16 - 16 - 3070-3/8H-10-SS NOZZLE - CORE Protection Appliance Coverage Nozzle (Includes Metal Blow Off Cap and Lanyard)	15	0
1		34 - 34 - A0019852 24VDC or 120VAC Single Action Manual Actuation Device (Push/Pull Station) With Protective Cover, One (1) Normally Open Contact	1	0
2		0 - 0 - 100-BW 2x4 Blank Plate for J-Box	5	0
2		0 - 0 - 12-F28021-005360 Duct Fire Thermostat. NO, Close on temp rise at 360°F.	5	0
2		0 - 0 - 59361-1/2 2x4 Extension Ring	5	0
2		16 - 16 - 3070-3/8H-10-SS NOZZLE - CORE Protection Appliance Coverage Nozzle (Includes Metal Blow Off Cap and Lanyard)	15	0
2		34 - 34 - A0019852 24VDC or 120VAC Single Action Manual Actuation Device (Push/Pull Station) With Protective Cover, One (1) Normally Open Contact	1	0

NOTE: EXHAUST DUCTWORK NEEDS TO BE LIQUID TIGHT AND PROPERLY SLOPED BACK TO HOOD PER CODE. LEAKY DUCTWORK AND DUCTWORK WITH IMPROPER SLOPE WILL NEED TO BE CORRECTED - THIS WILL RESULT IN EXTRA JOBSITE VISITS AND ADDITIONAL CHARGES FOR CORE PRE-TESTS AND TESTS.

FIRE SYSTEM #1 (HOODS #1 & #2)

CUSTOMER TO PROVIDE THE INFORMATION BELOW PRIOR TO ORDERING:

1. CORE water inlet static pressure (125 psi max) =
2. CORE water inlet operating pressure (49-70 psi) =
3. Hot water inlet static pressure (125 psi max) =
4. Hot water inlet operating pressure (44-70 psi) =
5. Hot water inlet temperature (140-170 degF) =
6. Total appliance gas load BTU/hr for each hood =
7. Gas pressure for appliance gas valve =
8. Approximate length of exhaust duct (If over 50ft, additional firestats are provided at 50ft intervals) =
9. Total pressure drop for CORE water field piping between hoods (10 psi max) =
10. Total pressure drop for hot water field piping between hoods (10 psi max) =
11. Detailed piping layout for CORE water field piping between hoods
12. Detailed piping layout for hot water field piping between hoods

FIRE SYSTEM #2 (HOODS #3, #4, & #5)

CUSTOMER TO PROVIDE THE INFORMATION BELOW PRIOR TO ORDERING:

1. CORE water inlet static pressure (125 psi max) =
2. CORE water inlet operating pressure (66-70 psi) =
3. Hot water inlet static pressure (125 psi max) =
4. Hot water inlet operating pressure (52-70 psi) =
5. Hot water inlet temperature (140-170 degF) =
6. Total appliance gas load BTU/hr for each hood =
7. Gas pressure for appliance gas valve =
8. Approximate length of exhaust duct (If over 50ft, additional firestats are provided at 50ft intervals) =
9. Total pressure drop for CORE water field piping between hoods (10 psi max) =
10. Total pressure drop for hot water field piping between hoods (10 psi max) =
11. Detailed piping layout for CORE water field piping between hoods
12. Detailed piping layout for hot water field piping between hoods

VALVE SIZES SHOWN ARE ESTIMATED - ACTUAL SIZE OF GAS VALVES PROVIDED IS SUBJECT TO CHANGE ONCE GAS PRESSURE AND APPLIANCE BTU LOADS ARE PROVIDED.

PROPER CORE AND HOT WATER PRESSURES ARE CRITICAL TO SYSTEM PERFORMANCE. PLEASE CONTACT SALES OFFICE IF THERE ARE ANY CONCERNS OR QUESTIONS REGARDING REQUIRED PRESSURES.

GASVALVES AND STRAINERS

	GAS VALVE SIZING							GAS VALVE DIMENSIONS						INSTALLATION	PART NUMBERS		
	TYPE	SIZE	VOLTAGE	MIN. INLET PRESSURE	MAX. INLET PRESSURE	FLOW AT 1 IN.W.C. DROP NATURAL GAS	FLOW AT 1 IN.W.C. DROP PROPANE	DIM "A"	DIM "B"	DIM "C"	DIM "D"	DIM "F"	DIM "G"	MOUNTING ORIENTATION	GAS VALVE PART NUMBER	STRAINER PART NUMBER	GAS VALVE/STRAINER KIT
GAS VALVE FOR FS#1, FS#2 →	ELECTRICAL	1"	24 VDC	0 PSI (0 IN.W.C.)	5 PSI (138 IN.W.C.)	1,132,300 BTU/HR	734,733 BTU/HR	6-15/16"	5-15/16"	4-7/8"	5-3/16"	12-13/16"	10-11/16"	HORIZONTAL/VERTICAL	8214250-24VDC	4417K65	(SC)EGVC1-24
GAS VALVE FOR FS#2 →	ELECTRICAL	2"	24 VDC	0 PSI (0 IN.W.C.)	5 PSI (138 IN.W.C.)	2,940,500 BTU/HR	1,908,048 BTU/HR	7-5/8"	6-3/8"	7-1/4"	7-13-16"	15-5/8"	13-15/16"	HORIZONTAL/VERTICAL	8214280-24VDC	4417K68	(SC)EGVC2-24

ELECTRIC GAS VALVES ONLY

3/4" THROUGH 2" VALVES CAN BE MOUNTED WITH THE SOLENOID IN ANY POSITION ABOVE HORIZONTAL
2-1/2" THROUGH 3" VALVES MUST BE MOUNTED WITH THE SOLENOID VERTICAL AND UPRIGHT

ALL GAS VALVES/STRAINERS

PROPER CLEARANCE MUST BE PROVIDED IN ORDER TO SERVICE THE STRAINERS A MINIMUM OF 4" CLEARANCE DISTANCE MUST BE PROVIDED AT THE BASE OF THE STRAINER CUSTOMER MUST VERIFY BTU CONSUMPTION AS WELL AS PRESSURE RATING SPECIFIC GRAVITY OF NATURAL GAS = 0.64, SPECIFIC GRAVITY OF LP = 1.52

CALCULATIONS

TO CALCULATE GAS FLOW FOR OTHER THAN 1 IN.W.C. PRESSURE DROP
NEW BTU/HR = (BTU/HR AT 1 IN.W.C. PRESSURE DROP) X NEW PRESSURE DROP$^{0.5}$
TO CALCULATE GAS FLOW FOR OTHER THAN 0.64 SPECIFIC GRAVITY
NEW BTU/HR = (BTU/HR AT 0.64) X (0.64 / NEW SPECIFIC GRAVITY)$^{0.5}$

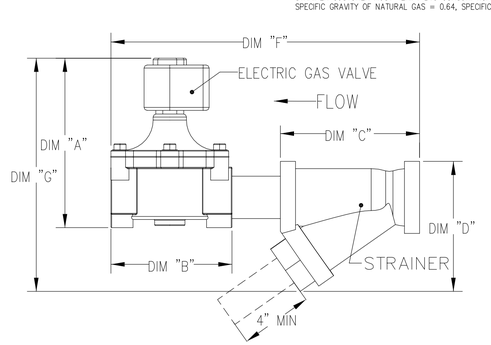

Job #: 2297387
Job Name: Maine Wharf Restaurant R6
Drawn By:
System Size: CORE Total FP required: 0
Hood # 1 11' 11.00" Long x 60" Wide x 30" High
Riser # 1 Size: 10" x 17"
Riser # 2 Size: 10" x 17"
Hood # 2 13' 11.00" Long x 60" Wide x 30" High
Riser # 1 Size: 10" x 15"
Riser # 2 Size: 10" x 15"
Drawn By:
System Size: CORE Total FP required: 0
Hood # 3 10' 0.00" Long x 54" Wide x 30" High
Riser # 1 Size: 10" x 21"
Hood # 4 14' 5.00" Long x 60" Wide x 30" High
Riser # 1 Size: 10" x 13"
Riser # 2 Size: 10" x 13"
Hood # 5 13' 5.00" Long x 60" Wide x 30" High
Riser # 1 Size: 10" x 12"
Riser # 2 Size: 10" x 12"

Reviewed for Code Compliance
Inspections Division
Approved with Conditions
Date: 08/19/15

CAPTIVEAIRE
www.captiveaire.com
MAINE OFFICE
PO Box 86, 179 South Rd., Topsfield, ME, 04490 PHONE: (207) 795-2590 FAX: (919) 227-5946 EMAIL: reg21@captiveaire.com

Maine Wharf Restaurant R6
PORTLAND, ME, 04101

DATE: 4/29/2015
DWG.#: 2297387
DRAWN BY: BFC-21
SCALE: 3/4" = 1'-0"
MASTER DRAWING
SHEET NO. 7

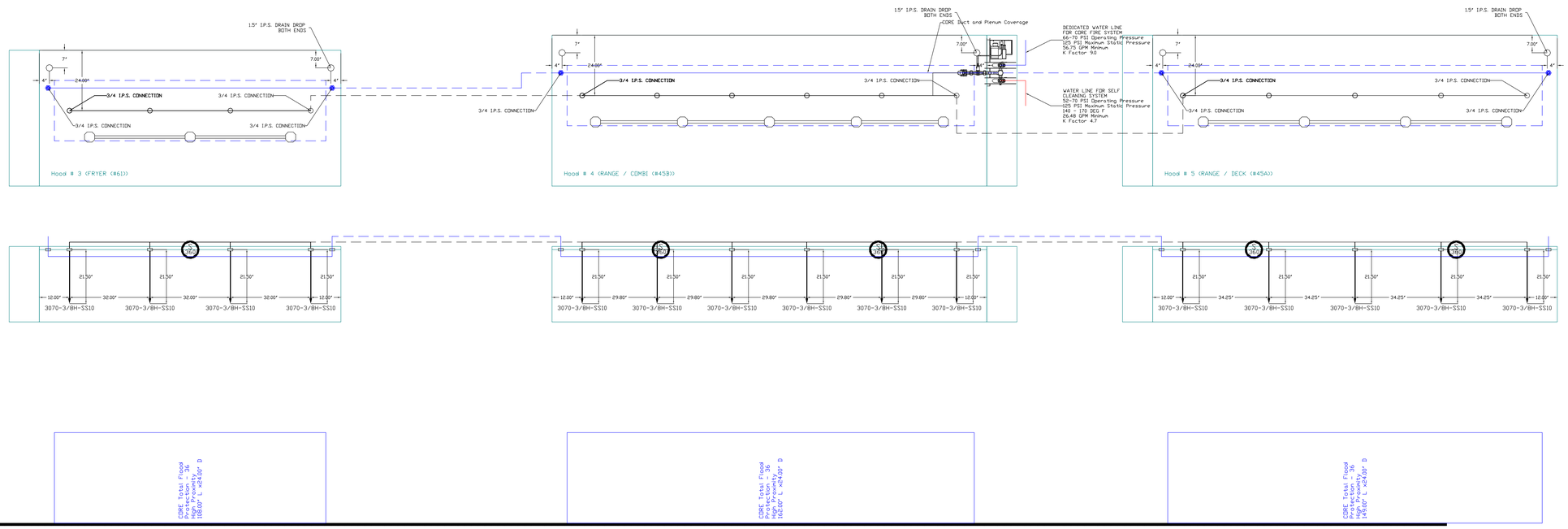

24V CORE BASIC OPERATING INSTRUCTIONS

12/04/2013 Rev. 3

CORE PROTECTION FIRE SYSTEM

CORE PROTECTION FIRE SYSTEMS CAN BE INSTALLED FOR HOOD FIRE PROTECTION AS WELL AS POLLUTION CONTROL UNIT FIRE PROTECTION IN THE EVENT OF A FIRE, OR ON MANUAL ACTUATION CORE PROTECTION IS ACTIVATED

IF THE INSTALLED FIRESTAT IN THE ABOVEREAM SENSES A TEMPERATURE HOTTER THAN THE INTERNAL SET POINT OR IF THE MANUAL ACTUATION DEVICE IS PUSHED THE FIRE SYSTEM IS ACTIVATED. IN KITCHEN HOODS AN ELECTRIC WATER SOLENOID IS ENERGIZED ALLOWING THE FLOW OF WATER TO THE HOOD DUCT AND PLENUM THROUGH THE SELF CLEANING HOOD SPRAY BAR. AT THE SAME TIME A SECOND WATER SOLENOID IS ENERGIZED AND ALLOWS THE FLOW OF WATER TO THE APPLIANCES. SURFACTANT IS CONTINUALLY INJECTED INTO THE WATER STREAM TO HELP SUPPRESS THE FIRE. IN A POLLUNTION CONTROL UNIT, THIS ELECTRONIC SIGNAL ENERGIZES A SOLENOID ALLOWING THE FLOW OF WATER INTO THE INDIVIDUALLY PIPED NOZZLES.

ONCE THE FIRE SYSTEM IS ACTIVATED, A "FIRE SYSTEM ACTIVATED" LIGHT IS ILLUMINATED ON THE CORE CONTROL PANEL AND AN AUDIBLE ALARM SOUNDS. FOR KITCHEN HOOD PROTECTION ALL GAS AND ELECTRIC APPLIANCES UNDER THE HOOD MUST BE ELECTRICALLY INTERLOCKED TO SHUT OFF. THIS IS ACHIEVED VIA A GAS VALVE, RELAY AND/OR A SHUNT TRIP BREAKER. A TIMER IS ALSO ENERGIZED UPON FIRE SYSTEM ACTIVATION. THE TIMER IS SET FOR 30 MINUTES AND KEEPS THE WATER SPRAY SYSTEM RUNNING FOR A MINIMUM OF 30 MINUTES. THIS IS NECESSARY TO HELP EXTINGUISH ALL REMAINING DUCT FIRE POTENTIAL.

THE FIRE SYSTEM IS ELECTRICALLY OPERATED AND THUS REQUIRES A BATTERY BACKUP SYSTEM. IN THE EVENT OF A LOSS OF ELECTRICAL POWER, ALL GAS AND ELECTRIC APPLIANCES UNDER THE HOOD MUST BE ELECTRICALLY INTERLOCKED TO SHUT OFF. THIS IS ACHIEVED VIA A GAS VALVE RELAY AND/OR A SHUNT TRIP BREAKER. THE BATTERY
BACKUP WILL AUTOMATICALLY ENERGIZE UPON A LOSS OF POWER. THE BATTERY BACKUP WILL MONITOR THE FIRE SYSTEM CIRCUIT FOR ONE DAY AND BE ABLE TO OPERATE THE FIRE SYSTEM CIRCUIT FOR A MINIMUM OF 30 MINUTES. ONCE POWER IS RESTORED, THE BATTERY WILL AUTOMATICALLY RECHARGE.

CORE PROTECTION RESET OVERVIEW

THERE ARE MULTIPLE ACTIONS REQUIRED TO RESET THE FIRE SYSTEM. FIRST, THE FIRESTAT MUST BE COOLED TO BELOW ITS INTERNAL SET POINT AND THE MANUAL ACTUATION DEVICE MUST BE RESET BY TWISTING THE BUTTON IN A CLOCKWISE DIRECTION. ONCE BOTH OF THESE DEVICES HAVE BEEN RESET, THE TIMER WILL AUTOMATICALLY TOP THE FIRE SYSTEM ONCE THE TIME GUARDIN HAS ENDED. ONCE THE TIMER HAS ENDED AND THE FIRESTAT AND MANUAL ACTUATION DEVICE HAVE BEEN RESET, THE FIRE SYSTEM RESET BUTTON ON THE FACE OF THE CORE CONTROL CABINET, THIS WILL RE-ENERGIZE THE TIMER AND RESET THE SYSTEM. NOTE: THE FIRESTAT MUST BE COOL AND THE MANUAL ACTUATION DEVICE MUST BE RESET FOR THIS BUTTON TO WORK.

THE FIRE SYSTEM MUST BE FILLED WITH SURFACTANT AND NOZZLE CAPS MUST BE REINSTALLED.

AFTER A FIRE, FULL INSPECTION BY A CERTIFIED PROFESSIONAL MUST BE CONDUCTED PRIOR TO RESTARTING THE FIRE SYSTEM.

CORE APPLICATION SPECIFIC DETAILS

SELF CLEANING HOODS
SELF CLEANING HOOD OPTION IS REQUIRED TO APPLY CORE PROTECTION. HIGH EFFICIENCY, HIGH VELOCITY CARTRIDGE, SOLID, OR COMBO FILTERS ARE REQUIRED. IF SUBSTITUTE FILTERS ARE UTILIZED, PRODUCT WARRANTY IS VOID AND THERE IS NO GUARANTEE IN PERFORMANCE.

SOLID FUEL APPLIANCES
SOLID FUEL APPLIANCES PRODUCE SPARKS THAT CAN TRAVEL INTO DUCTWORK. THESE APPLIANCES REQUIRE SOLID FILTERS AND AN ADDITIONAL FIRESTAT AT THE DUCT DISCHARGE NEAR THE FAN. IF THE DUCTWORK EXCEEDS 25 FT IN LENGTH WHEREVER CONSTRUCTED, AN ADDITIONAL FIRESTAT MUST BE WIRED INTO THE SUPERVISED LOOP. WHEN USING MORE THAN ONE FIRESTAT, ADDITIONAL FIRESTATS ARE WIRED INTO THE SUPERVISED LOOP WITH THE FIRST FIRESTAT. DUCT SHOULD BE INSULATED PER CORE REQUIREMENTS. IF SUBSTITUTE FILTERS ARE UTILIZED, PRODUCT WARRANTY IS VOID AND THERE IS NO GUARANTEE IN PERFORMANCE. SELF CLEANING HOODS AND ETL LISTED DUCTWORK ARE ALSO REQUIRED.

DUCT FIRESTATS
A FIRESTAT MUST BE INSTALLED AT 50 FT INTERVALS WHEN THE DUCT LENGTH EXCEEDS 50 FT.

IMPORTANT:
ANY DEVIATION FROM ANY OF THE MANUFACTURER'S RECOMMENDATIONS IN THIS DOCUMENT OR THE OPERATION AND INSTALLATION MANUAL MUST BE APPROVED BY THE OWNER OF THIS EQUIPMENT AND VOIDS THE WARRANTY AND PERFORMANCE GUARANTEE OF THIS PRODUCT.

NOTES
- FIELD PIPE DROPS AS SHOWN
  ELBOWS, TEES, AND NOZZLES SUPPLIED BY CAS.
- RELOCATE NOZZLES IF FLOW PATTERN IS BLOCKED BY SHELVING, SALAMANDERS, ETC.
- FACTORY PIPING EXTENDS A MAXIMUM OF 6' ABOVE THE TOP OF THE HOOD.

- APPLIANCE DIMENSIONS LISTED REPRESENT THE COOKING SURFACE SIZE, NOT THE OVERALL APPLIANCE SIZE.

- THIS FIRE SYSTEM COMPLIES WITH U.L. 300 REQUIREMENTS

Job #: 2297387
Job Name: Maine Wharf Restaurant R6
Drawn By:
System Size: CORE
Hood # 3 10' 0.00" Long x 54" Wide x 30" High
Riser # 1 Size: 10" x 21"
Hood # 3 Metal Blow-Off Caps included.
Hood # 4 14' 5.00" Long x 60" Wide x 30" High
Riser # 1 Size: 10" x 13"
Riser # 2 Size: 10" x 13"
Hood # 4 Metal Blow-Off Caps included.
Hood # 5 13' 5.00" Long x 60" Wide x 30" High
Riser # 1 Size: 10" x 12"
Riser # 2 Size: 10" x 12"
Hood # 5 Metal Blow-Off Caps included.

Hood # 4

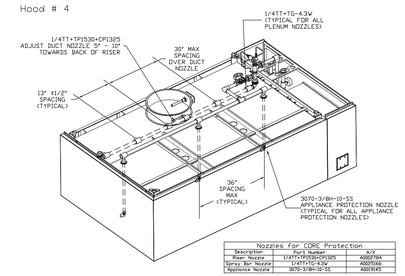

Nozzles for CORE Protection		
Description	Part Number	A/X
Plenum Nozzle	1/4TT+TP1530+CP1325	A0QQ7BA
Spray Bar Nozzle	1/4TT+TG-4.3W	A0QP05K
Appliance Nozzle	3070-3/8H-10-SS	A0QR5VR

ISOMETRIC VIEWS ARE FOR GRAPHICAL REPRESENTATION OF TYPICAL NOZZLE PLACEMENTS AND TYPE. QUANTITIES OF NOZZLES WILL VARY.

FIRE SYSTEM #2

Reviewed for Code Compliance
Inspections Division
Approved with Conditions

Date: 08/19/15

CAPTIVEAIRE
www.captiveaire.com
MAINE OFFICE
PO Box 86, 179 South Rd., Topsfield, ME, 04490 PHONE: (207) 796-2590 FAX: (919) 227-5946 EMAIL: reg21@captiveaire.com

Maine Wharf Restaurant R6
PORTLAND, ME, 04101

DATE: 4/29/2015

DWG.#: 2297387

DRAWN BY: BFC-21

SCALE: 1/2" = 1'-0"

MASTER DRAWING

SHEET NO. 8

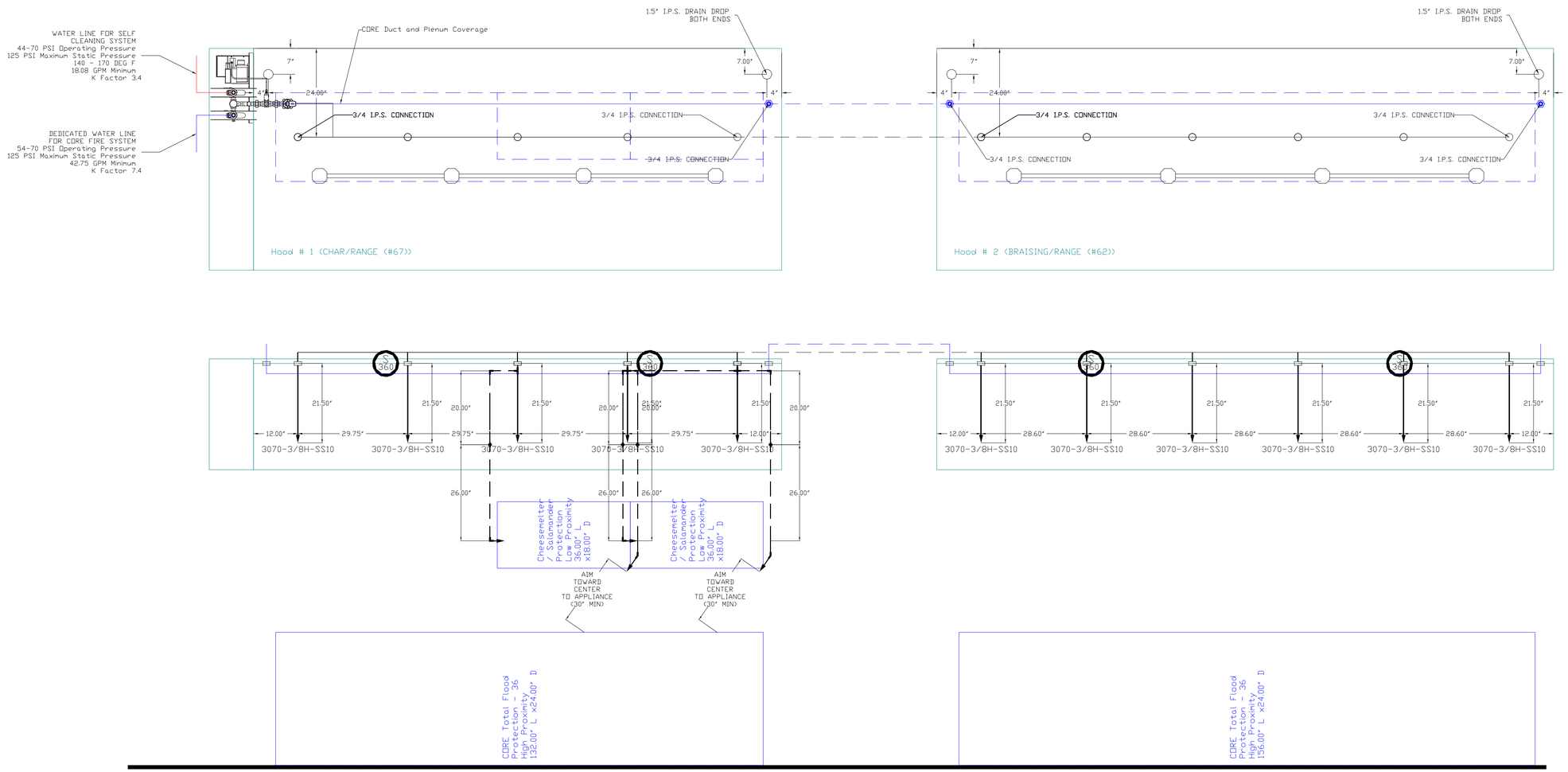

24V CORE BASIC OPERATING INSTRUCTIONS

12/04/2013 Rev. 3

CORE PROTECTION FIRE SYSTEM

CORE PROTECTION FIRE SYSTEMS CAN BE INSTALLED FOR HOOD FIRE PROTECTION, AS WELL AS POLLUTION CONTROL UNIT FIRE PROTECTION. IN THE EVENT OF A FIRE, OR ON MANUAL ACTUATION CORE PROTECTION IS ACTIVATED.

IF THE INSTALLED FIRESTAT IN THE AIRSTREAM SENSES A TEMPERATURE HOTTER THEN ITS INTERNAL SET POINT OR IF THE MANUAL ACTUATION DEVICE IS PUSHED THE FIRE SYSTEM IS ACTIVATED. IN KITCHEN HOODS AN ELECTRIC WATER SOLENOID IS ENERGIZED ALLOWING THE FLOW OF WATER TO THE HOOD DUCT AND PLENUM THROUGH THE SELF CLEANING HOOD SPRAY BAR. AT THE SAME TIME A SECOND WATER SOLENOID IS ENERGIZED AND ALLOWS THE FLOW OF WATER TO THE APPLIANCES. SURFACTANT IS CONTINUALLY INJECTED INTO THE WATER STREAM TO HELP SUPPRESS THE FIRE. IN A POLLUNTION CONTROL UNIT, THIS ELECTRONIC SIGNAL ENERGIZES A SOLENOID ALLOWING THE FLOW OF WATER INTO THE INDIVIDUALLY PIPED MODULES.

ONCE THE FIRE SYSTEM IS ACTIVATED, A ?FIRE SYSTEM ACTIVATED? LIGHT IS ILLUMINATED ON THE CORE CONTROL PANEL AND AN AUDIBLE ALARM SOUNDS. FOR KITCHEN HOOD PROTECITON ALL GAS AND ELECTRIC APPLIANCES UNDER THE HOOD MUST BE ELECTRICALLY INTERLOCKED TO SHUT OFF. THIS IS ACHIEVED VIA A GAS VALVE RELAY AND/OR A SHUNT TRIP BREAKER. A TIMER IS ALSO ENERGIZED UPON FIRE SYSTEM ACTIVATION. THE TIMER IS SET FOR 30 MINUTES AND KEEPS THE WATER SPRAY SYSTEM RUNNING FOR A MINIMUM OF 30 MINUTES. THIS IS NECESSARY TO HELP EXTINGUISH ALL REMAINING DUCT FIRE POTENTIAL.

THE FIRE SYSTEM IS ELECTRICALLY OPERATED AND THUS REQUIRES A BATTERY BACKUP SYSTEM. IN THE EVENT OF A LOSS OF ELECTRICAL POWER, ALL GAS AND ELECTRIC APPLIANCES UNDER THE HOOD MUST BE ELECTRICALLY INTERLOCKED TO SHUT OFF. THIS IS ACHIEVED VIA A GAS VALVE RELAY AND/OR A SHUNT TRIP BREAKER. THE BATTERY BACKUP WILL AUTOMATICALLY ENERGIZE UPON A LOSS OF POWER. THE BATTERY BACKUP WILL MONITOR THE FIRE SYSTEM CIRCUIT FOR ONE DAY AND BE ABLE TO OPERATE THE FIRE SYSTEM CIRCUIT FOR A MINIMUM OF 30 MINUTES. ONCE POWER IS RESTORED, THE BATTERY WILL AUTOMATICALLY RECHARGE.

CORE PROTECTION RESET OVERVIEW

THERE ARE MULTIPLE ACTIONS REQUIRED TO RESET THE FIRE SYSTEM. FIRST, THE FIRESTAT MUST BE COOLED TO BELOW ITS INTERNAL SET POINT AND THE MANUAL ACTUATION DEVICE MUST BE RESET BY TWISTING THE BUTTON IN A CLOCKWISE DIRECTION. ONCE BOTH OF THESE DEVICES HAVE BEEN RESET, THE TIMER WILL AUTOMATICALLY STOP THE FIRE SYSTEM ONCE ITS TIME DURATION HAS ENDED. AN ALTERNATIVE METHOD TO BYPASSING THE TIMER IS TO PRESS THE FIRE SYSTEM RESET BUTTON ON THE FACE OF THE CORE CONTROL CABINET. THIS WILL DE-ENERGIZE THE TIMER AND RESET THE SYSTEM. NOTE: THE FIRESTAT MUST BE COOL AND THE MANUAL ACTUATION DEVICE MUST BE RESET FOR THIS BUTTON TO WORK.

THE FIRE SYSTEM MUST BE FILLED WITH SURFACTANT AND NOZZLE CAPS MUST BE REINSTALLED.

AFTER A FIRE, FULL INSPECTION BY A CERTIFIED PROFESSIONAL MUST BE CONDUCTED PRIOR TO RESTARTING THE FIRE SYSTEM.

CORE APPLICATION SPECIFIC DETAILS

SELF CLEANING HOODS
SELF CLEANING HOOD OPTION IS REQUIRED TO APPLY CORE PROTECTION. HIGH EFFICIENCY, HIGH VELOCITY CARTRIDGE, SOLID, OR COMBO FILTERS ARE REQUIRED. IF SUBSTITUTE FILTERS ARE UTILIZED, PRODUCT WARRANTY IS VOID AND THERE IS NO GUARANTEE IN PERFORMANCE.

SOLID FUEL APPLIANCES
SOLID FUEL APPLIANCES PRODUCE SPARKS THAT CAN TRAVEL INTO DUCTWORK. THESE APPLIANCES REQUIRE SOLID FILTERS AND AN ADDITIONAL FIRESTAT AT THE DUCT DISCHARGE NEAR THE FAN IF THE DUCTWORK EXCEEDS 10 FEET IN LENGTH OR CONTAINS HORIZONTAL DUCT RUNS. INDICATE ON DUCTWORK DRAWING WHERE FIRESTAT IS TO BE INSTALLED WITH QUICK SEAL. ALL ADDITIONAL FIRESTATS ARE WIRED INTO THE SUPERVISED LOOP WITH THE FIRST FIRESTAT. DUCT SHOULD BE INSULATED PER CODE REQUIREMENTS. IF SUBSTITUTE FILTERS ARE UTILIZED, PRODUCT WARRANTY IS VOID AND THERE IS NO GUARANTEE IN PERFORMANCE. SELF CLEANING HOODS AND ETL LISTED DUCTWORK ARE ALSO REQUIRED.

DUCT FIRESTATS
A FIRESTAT MUST BE INSTALLED AT 50 FT INTERVALS WHEN THE DUCT LENGTH EXCEEDS 50 FT.

IMPORTANT:
ANY DEVIATION FROM ANY OF THE MANUFACTURER'S RECOMMENDATIONS IN THIS DOCUMENT OR THE OPERATION AND INSTALLATION MANUAL MUST BE APPROVED BY THE OWNER OF THIS EQUIPMENT AND VOIDS THE WARRANTY AND PERFORMANCE GUARANTEE OF THIS PRODUCT.

NOTES
- FIELD PIPE DROPS AS SHOWN
  ELBOWS, TEES, AND NOZZLES SUPPLIED BY CAS
- RELOCATE NOZZLES IF FLOW PATTERN IS BLOCKED BY SHELVING, SALAMANDERS, ETC.
- FACTORY PIPING EXTENDS A MAXIMUM OF 6" ABOVE THE TOP OF THE HOOD.
- APPLIANCE DIMENSIONS LISTED REPRESENT THE COOKING SURFACE SIZE, NOT THE OVERALL APPLIANCE SIZE.
- THIS FIRE SYSTEM COMPLIES WITH U.L. 300 REQUIREMENTS

Job #: 2297387
Job Name: Maine Wharf Restaurant R6
Drawn By:
System Size: CORE
Hood # 1 11' 11.00" Long x 60" Wide x 30" High
Riser # 1 Size: 10" x 17"
Riser # 2 Size: 10" x 17"
Hood # 1 Metal Blow-Off Caps included.
Hood # 2 13' 11.00" Long x 60" Wide x 30" High
Riser # 1 Size: 10" x 15"
Riser # 2 Size: 10" x 15"
Hood # 2 Metal Blow-Off Caps included.

Hood # 1

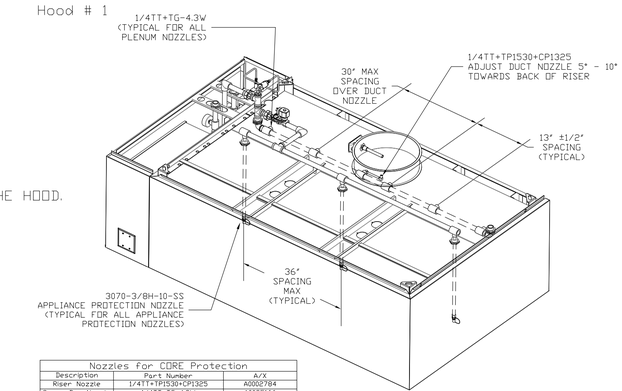

Nozzles for CORE Protection		
Description	Part Number	A/X
Riser Nozzle	1/4TT+TP1530+CP1325	A0002784
Spray Bar Nozzle	1/4TT+TG-4.3W	A0025166
Appliance Nozzle	3070-3/8H-10-SS	A0019145

ISOMETRIC VIEWS ARE FOR GRAPHICAL REPRESENTATION OF TYPICAL NOZZLE PLACEMENTS AND TYPE. QUANTITIES OF NOZZLES WILL VARY.

FIRE SYSTEM #1

Reviewed for Code Compliance
Inspections Division
Approved with Conditions
Date: 08/19/15

CAPTIVEAIRE
www.captiveaire.com
MAINE OFFICE
PO Box 86, 179 South Rd., Topsfield, ME, 04490 PHONE: (207) 796-2590 FAX: (919) 227-5946 EMAIL: reg21@captiveaire.com

Maine Wharf Restaurant R6
PORTLAND, ME, 04101

DATE: 4/29/2015
DWG.#: 2297387
DRAWN BY: BFC-21
SCALE: 3/4" = 1'-0"
MASTER DRAWING
SHEET NO. 9

EXHAUST FAN INFORMATION – Job#2297387

FAN UNIT NO.	TAG	FAN UNIT MODEL #	CFM	ESP.	RPM	H.P.	B.H.P.	Ø	VOLT	FLA	WEIGHT (LBS.)	SONES
1	EF-2	NCA30HPFA	6706	2.000	846	5.000	3.5650	3	208	15.0	471	16.2
2	EF-3	NCA30HPFA	7816	2.000	900	5.000	4.2980	3	208	15.0	471	17.3

MUA FAN INFORMATION – Job#2297387

FAN UNIT NO.	TAG	FAN UNIT MODEL #	BLOWER	HOUSING	CFM	ESP.	RPM	H.P.	B.H.P.	Ø	VOLT	FLA	WEIGHT (LBS.)	SONES
3	MUA-1	A3-D.750-G18	G18-PB	A3-D.750	5571	0.700	753	5.000	2.5990	3	208	15.0	1133	12.6
4	MUA-2	A3-D.750-G18	G18-PB	A3-D.750	6922	0.700	845	7.500	4.1130	3	208	21.1	1170	15.3

GAS FIRED MAKE-UP AIR UNIT(S)

FAN UNIT NO.	TAG	ACTUAL AIR DENSITY?	INPUT BTUs	OUTPUT BTUs	TEMP. RISE	REQUIRED INPUT GAS PRESSURE	GAS TYPE
3	MUA-1	NO	444711	409134	68 deg F	7 in. w.c. - 14 in. w.c.	Natural
4	MUA-2	NO	552557	508352	68 deg F	7 in. w.c. - 14 in. w.c.	Natural

FAN OPTIONS

FAN UNIT NO.	TAG	OPTION (Qty. - Descr.)
1	EF-2	1 - Grease Box
		1 - 3 Year Extended Motor Warranty
		1 - Extra Set of Belts
		1 - Fan Base Ceramic Seal - For Grease Ducts
2	EF-3	1 - Grease Box
		1 - 3 Year Extended Motor Warranty
		1 - Extra Set of Belts
		1 - Fan Base Ceramic Seal - For Grease Ducts
3	MUA-1	1 - Motorized Backdraft Damper for A3-D Housing
		1 - AC Interlock Relay - 24VAC Coil
		1 - Low Fire Start
		1 - Inlet Pressure Gauge, 0-35"
		1 - Manifold Pressure Gauge, -5 to 15" wc
		1 - Convenience Outlet (GFCI), 15 amp - Power Supply by Others
		1 - 3 Year Extended Motor Warranty
		1 - Extra Set of Belts
		1 - Freezestat (10)
		1 - Separate 120V Wiring Package (Required and used only for DCV or Prewire with VFD) - Three Phase Only
		1 - Full Crating For Commercial Heater
4	MUA-2	1 - Motorized Backdraft Damper for A3-D Housing
		1 - AC Interlock Relay - 24VAC Coil
		1 - Low Fire Start
		1 - Inlet Pressure Gauge, 0-35"
		1 - Manifold Pressure Gauge, -5 to 15" wc
		1 - Convenience Outlet (GFCI), 15 amp - Power Supply by Others
		1 - 3 Year Extended Motor Warranty
		1 - Extra Set of Belts
		1 - Freezestat (10)
		1 - Separate 120V Wiring Package (Required and used only for DCV or Prewire with VFD) - Three Phase Only
		1 - Full Crating For Commercial Heater

FAN ACCESSORIES

FAN UNIT NO.	TAG	EXHAUST			SUPPLY			
		GREASE CUP	GRAVITY DAMPER	WALL MOUNT	SIDE DISCHARGE	GRAVITY DAMPER	MOTORIZED DAMPER	WALL MOUNT
1	EF-2	YES						
2	EF-3	YES						
3	MUA-1						YES	
4	MUA-2						YES	

CURB ASSEMBLIES

NO.	ON FAN	WEIGHT	ITEM	SIZE
1	# 1	58 LBS	Curb	38.500"W x 38.500"L x 20.000"H Vented Hinged
2	# 2	58 LBS	Curb	38.500"W x 38.500"L x 20.000"H Vented Hinged
3	# 3	82 LBS	Curb	35.000"W x 84.000"L x 20.000"H Insulated
4	# 4	82 LBS	Curb	35.000"W x 84.000"L x 20.000"H Insulated

FAN #1 NCA30HPFA - EXHAUST FAN (EF-2)

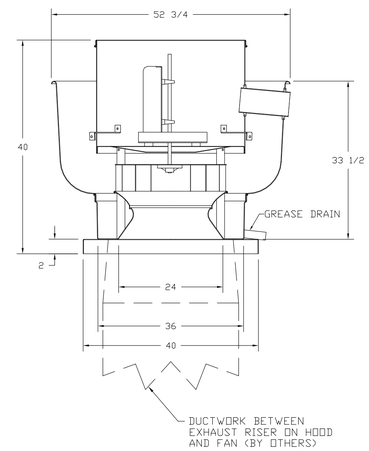

FEATURES:

- ROOF MOUNTED FANS
- RESTAURANT MODEL
- UL705 AND UL762
- AMCA SOUND AND AIR CERTIFIED
- WIRING FROM MOTOR TO DISCONNECT SWITCH
- WEATHERPROOF DISCONNECT
- HIGH HEAT OPERATION 300°F (149°C)
- GREASE CLASSIFICATION TESTING

NORMAL TEMPERATURE TEST
EXHAUST FAN MUST OPERATE CONTINUOUSLY WHILE EXHAUSTING AIR AT 300°F (149°C) UNTIL ALL FAN PARTS HAVE REACHED THERMAL EQUILIBRIUM, AND WITHOUT ANY DETERIORATING EFFECTS TO THE FAN WHICH WOULD CAUSE UNSAFE OPERATION.

ABNORMAL FLARE-UP TEST
EXHAUST FAN MUST OPERATE CONTINUOUSLY WHILE EXHAUSTING BURNING GREASE VAPORS AT 600°F (316°C) FOR A PERIOD OF 15 MINUTES WITHOUT THE FAN BECOMING DAMAGED TO ANY EXTENT THAT COULD CAUSE AN UNSAFE CONDITION.

OPTIONS

GREASE BOX
3 YEAR EXTENDED MOTOR WARRANTY
EXTRA SET OF BELTS
FAN BASE CERAMIC SEAL - FOR GREASE DUCTS

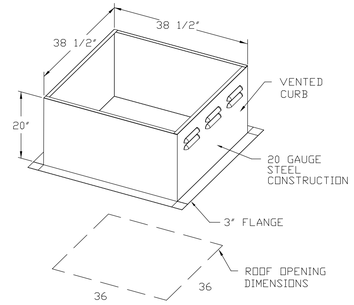

FAN #2 NCA30HPFA - EXHAUST FAN (EF-3)

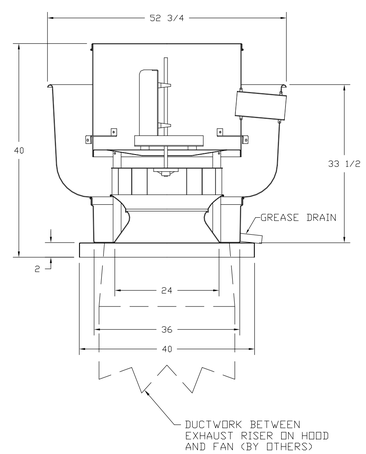

FEATURES:

- ROOF MOUNTED FANS
- RESTAURANT MODEL
- UL705 AND UL762
- AMCA SOUND AND AIR CERTIFIED
- WIRING FROM MOTOR TO DISCONNECT SWITCH
- WEATHERPROOF DISCONNECT
- HIGH HEAT OPERATION 300°F (149°C)
- GREASE CLASSIFICATION TESTING

NORMAL TEMPERATURE TEST
EXHAUST FAN MUST OPERATE CONTINUOUSLY WHILE EXHAUSTING AIR AT 300°F (149°C) UNTIL ALL FAN PARTS HAVE REACHED THERMAL EQUILIBRIUM, AND WITHOUT ANY DETERIORATING EFFECTS TO THE FAN WHICH WOULD CAUSE UNSAFE OPERATION.

ABNORMAL FLARE-UP TEST
EXHAUST FAN MUST OPERATE CONTINUOUSLY WHILE EXHAUSTING BURNING GREASE VAPORS AT 600°F (316°C) FOR A PERIOD OF 15 MINUTES WITHOUT THE FAN BECOMING DAMAGED TO ANY EXTENT THAT COULD CAUSE AN UNSAFE CONDITION.

OPTIONS

GREASE BOX
3 YEAR EXTENDED MOTOR WARRANTY
EXTRA SET OF BELTS
FAN BASE CERAMIC SEAL - FOR GREASE DUCTS

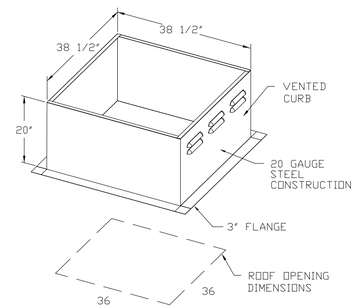

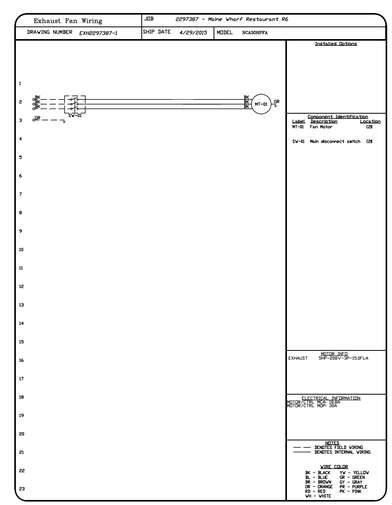

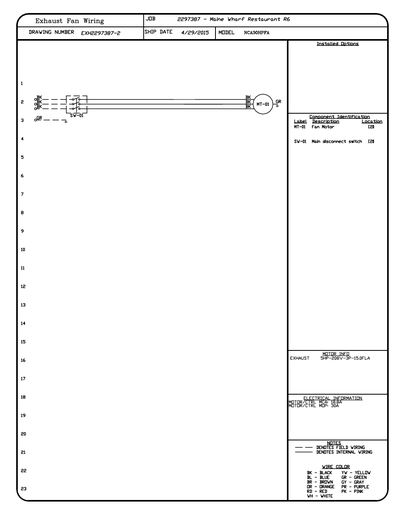

Reviewed for Code Compliance
Inspections Division
Approved with Conditions

Date: 08/19/15

CAPTIVEAIRE
www.captiveaire.com
MAINE OFFICE
PO Box 86, 179 South Rd., Topsfield, ME, 04490 PHONE: (207) 796-2590 FAX: (919) 227-5946 EMAIL: reg21@captiveaire.com

Maine Wharf Restaurant R6
PORTLAND, ME, 04101

DATE: 4/29/2015

DWG.#: 2297387

DRAWN BY: BFC-21

SCALE: 3/4" = 1'-0"

MASTER DRAWING

SHEET NO. 10

FAN #3 A3-D.750-G18 - HEATER (MUA-1)
1. DIRECT GAS FIRED HEATED MAKE UP AIR UNIT WITH 18" BLOWER AND 18" BURNER.
2. INTAKE HOOD WITH EZ FILTERS
3. DOWN DISCHARGE - AIR FLOW RIGHT -> LEFT
4. MOTORIZED BACK DRAFT DAMPER 30" X 30" FOR SIZE 3 STANDARD & MODULAR DIRECT FIRED HEATERS W/EXTENDED SHAFT, STANDARD GALVANIZED CONSTRUCTION, 3/4" REAR FLANGE, NFBUP-S ACTUATOR INCLUDED
5. COOLING INTERLOCK RELAY. 24VAC COIL. 120V CONTACTS. LOCKS OUT BURNER CIRCUIT WHEN AC IS ENERGIZED.
6. LOW FIRE START. ALLOWS THE BURNER CIRCUIT TO ENERGIZE WHEN THE MODULATION CONTROL IS IN A LOW FIRE POSITION.
7. GAS PRESSURE GAUGE, 0-35", 2.5" DIAMETER, 1/4" THREAD SIZE
8. GAS PRESSURE GAUGE, -5 TO +15 INCHES WC, 2.5" DIAMETER, 1/4" THREAD SIZE
9. GFCI 15 AMP CONVENIENCE OUTLET FOR HEATER ENCLOSURE. POWER SUPPLY BY OTHERS - INCLUDES RECEPTACLE AND J BOX.
10. 3 YEAR EXTENDED WARRANTY FOR FAN MOTOR. PARTS ONLY; DOES NOT INCLUDE LABOR.
11. EXTRA SET OF V-BELTS. ONLY TO BE ORDERED AS FAN OPTION AT TIME FAN IS ORDERED.
12. FREEZESTAT WITH 10' SENSOR. FACTORY SET AT 35°F AND 10 MINUTES.
13. SEPARATE 120VAC WIRING PACKAGE FOR MAKE-UP AIR UNITS. OPTION MUST BE SELECTED WHEN MOUNTING VFD IN PREWIRE PANEL OR WITH DCV PACKAGE. PROVIDES SEPARATE 120VAC INPUT TO SUPPLY FAN. THIS 120V SIGNAL MUST BE RUN BY ELECTRICIAN FROM DCV TO MUA SWITCH.
14. FULL CRATING FOR COMMERCIAL HEATERS FOR SHIPPING.

SUPPLY SIDE HEATER INFORMATION:

WINTER TEMPERATURE = 0°F. TEMP. RISE = 68°F.
BTUs CALCULATED OFF STANDARD AIR DENSITY
OUTPUT BTUs AT ALTITUDE OF 0.0 ft. = 409134
INPUT BTUs AT ALTITUDE OF 0.0 ft. = 444711

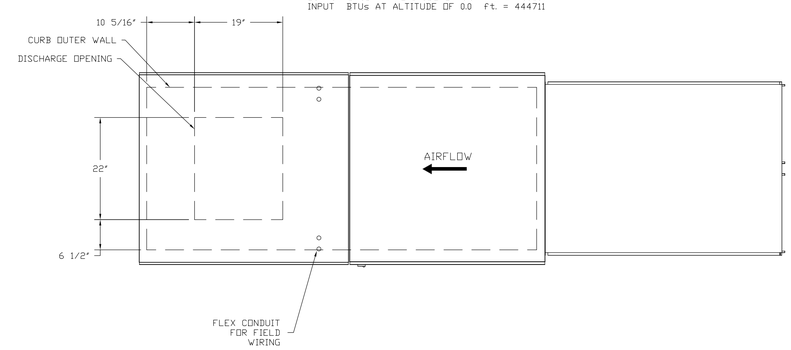

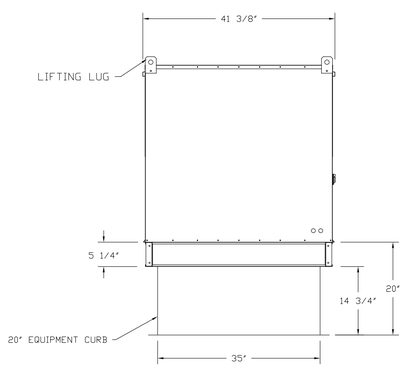

ROOF OPENING 2" SMALLER THAN CURB DIMENSION.

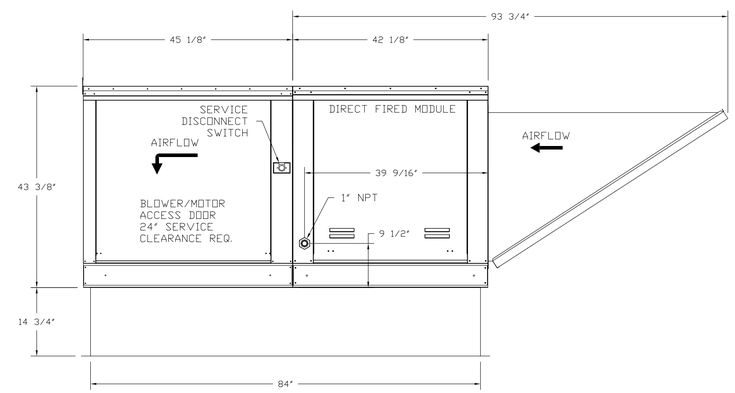

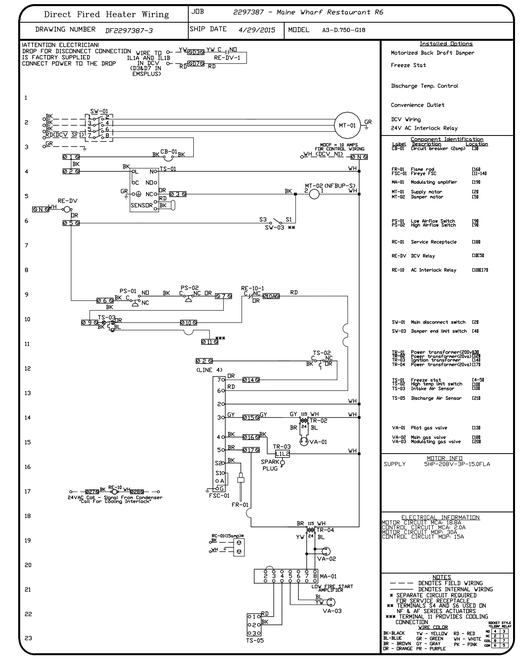

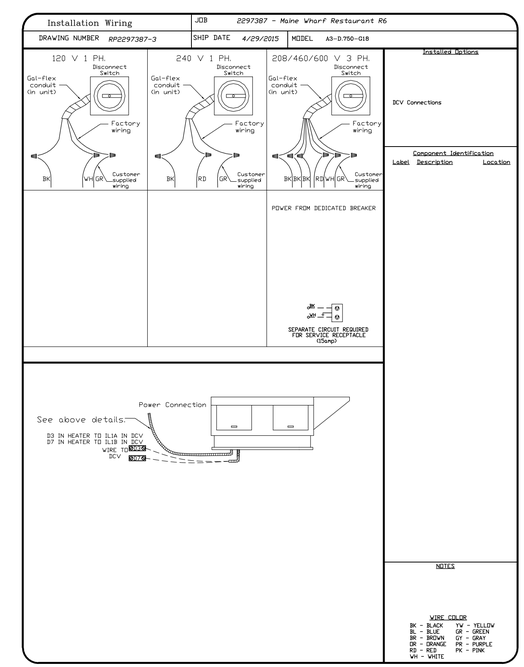

Reviewed for Code Compliance
Inspections Division
Approved with Conditions

Date: 08/19/15

CAPTIVEAIRE
www.captiveaire.com
MAINE OFFICE
PO Box 86, 179 South Rd., Topsfield, ME, 04490 PHONE: (207) 795-2590 FAX: (919) 227-5946 EMAIL: reg21@captiveaire.com

Maine Wharf Restaurant R6
PORTLAND, ME, 04101

DATE: 4/29/2015

DWG.#: 2297387

DRAWN BY: BFC-21

SCALE: 3/4" = 1'-0"

MASTER DRAWING

SHEET NO. 11

FAN #4 A3-D.750-G18 - HEATER (MUA-2)
1. DIRECT GAS FIRED HEATED MAKE UP AIR UNIT WITH 18" BLOWER AND 18" BURNER.
2. INTAKE HOOD WITH EZ FILTERS
3. DOWN DISCHARGE - AIR FLOW RIGHT -> LEFT
4. MOTORIZED BACK DRAFT DAMPER 30" X 30" FOR SIZE 3 STANDARD & MODULAR DIRECT FIRED HEATERS W/EXTENDED SHAFT, STANDARD GALVANIZED CONSTRUCTION, 3/4" REAR FLANGE, NFBUP-S ACTUATOR INCLUDED
5. COOLING INTERLOCK RELAY. 24VAC COIL. 120V CONTACTS. LOCKS OUT BURNER CIRCUIT WHEN AC IS ENERGIZED.
6. LOW FIRE START. ALLOWS THE BURNER CIRCUIT TO ENERGIZE WHEN THE MODULATION CONTROL IS IN A LOW FIRE POSITION.
7. GAS PRESSURE GAUGE, 0-35", 2.5" DIAMETER, 1/4" THREAD SIZE
8. GAS PRESSURE GAUGE, -5 TO +15 INCHES WC, 2.5" DIAMETER, 1/4" THREAD SIZE
9. GFCI 15 AMP CONVENIENCE OUTLET FOR HEATER ENCLOSURE. POWER SUPPLY BY OTHERS - INCLUDES RECEPTACLE AND J BOX.
10. 3 YEAR EXTENDED WARRANTY FOR FAN MOTOR. PARTS ONLY; DOES NOT INCLUDE LABOR.
11. EXTRA SET OF V-BELTS. ONLY TO BE ORDERED AS FAN OPTION AT TIME FAN IS ORDERED.
12. FREEZESTAT WITH 10' SENSOR. FACTORY SET AT 35°F AND 10 MINUTES.
13. SEPARATE 120VAC WIRING PACKAGE FOR MAKE-UP AIR UNITS. OPTION MUST BE SELECTED WHEN MOUNTING VFD IN PREWIRE PANEL OR WITH DCV PACKAGE. PROVIDES SEPARATE 120VAC INPUT TO SUPPLY FAN. THIS 120V SIGNAL MUST BE RUN BY ELECTRICIAN FROM DCV TO MUA SWITCH.
14. FULL CRATING FOR COMMERCIAL HEATERS FOR SHIPPING.

SUPPLY SIDE HEATER INFORMATION:

WINTER TEMPERATURE = 0°F. TEMP. RISE = 68°F.
BTUs CALCULATED OFF STANDARD AIR DENSITY
OUTPUT BTUs AT ALTITUDE OF 0.0 ft. = 508352
INPUT BTUs AT ALTITUDE OF 0.0 ft. = 552556

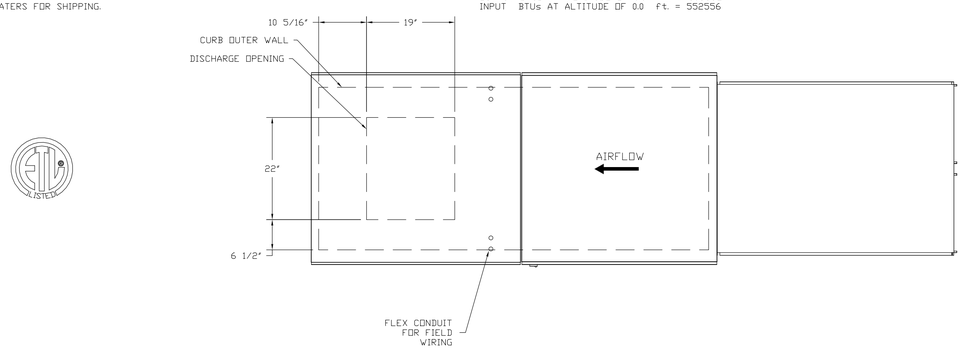

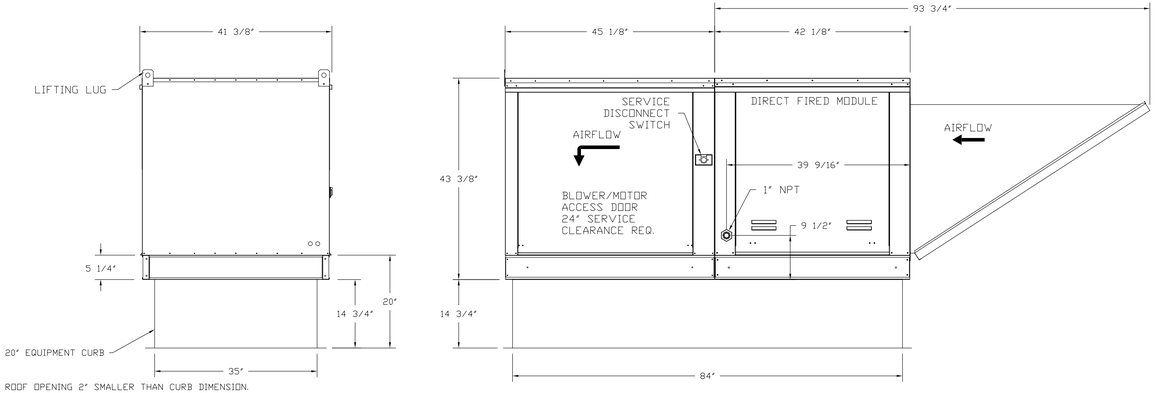

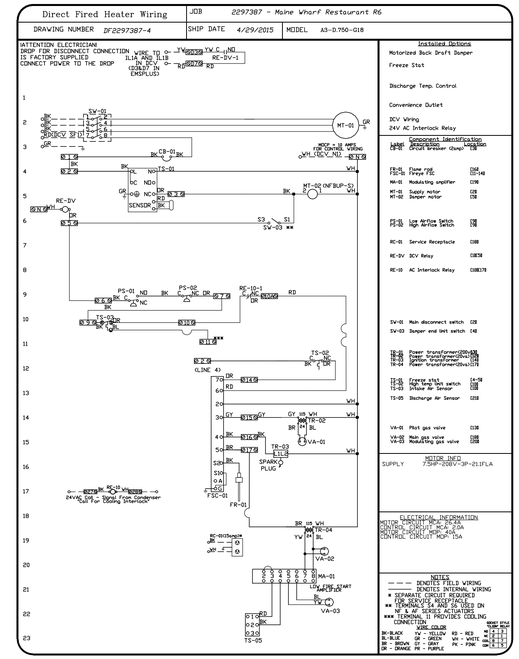

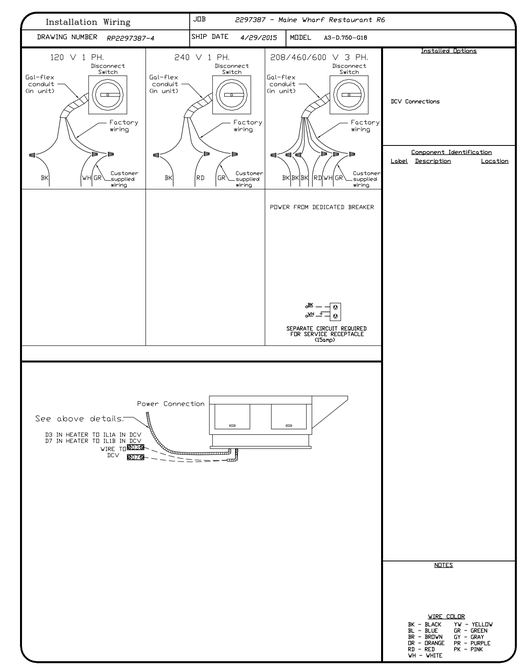

Reviewed for Code Compliance
Inspections Division
Approved with Conditions
Date: 08/19/15

CAPTIVEAIRE
www.captiveaire.com
MAINE OFFICE
PO Box 86, 179 South Rd., Torsfield, ME, 04490 PHONE: (207) 795-2590 FAX: (919) 227-5946 EMAIL: rep21@captiveaire.com

Maine Wharf Restaurant R6
PORTLAND, ME, 04101

DATE: 4/29/2015

DWG.#: 2297387

DRAWN BY: BFC-21

SCALE: 3/4" = 1'-0"

MASTER DRAWING

SHEET NO. 12

ELECTRICAL PACKAGES – Job#2297387

NO.	TAG	PACKAGE #	LOCATION	SWITCHES		OPTION	FANS CONTROLLED				
				LOCATION	QUANTITY		TYPE	ø	H.P.	VOLT	FLA
1		DCV-1111	Utility Cabinet Left	Utility Cabinet Left	1 Light	Smart Controls DCV	Exhaust	3	5.000	208	15.0
				Hood # 1	1 Fan		Supply	3	5.000	208	15.0
2		DCV-1111	Utility Cabinet Right	Utility Cabinet Right	1 Light	Smart Controls DCV	Exhaust	3	5.000	208	15.0
				Hood # 4	1 Fan		Supply	3	7.500	208	21.1

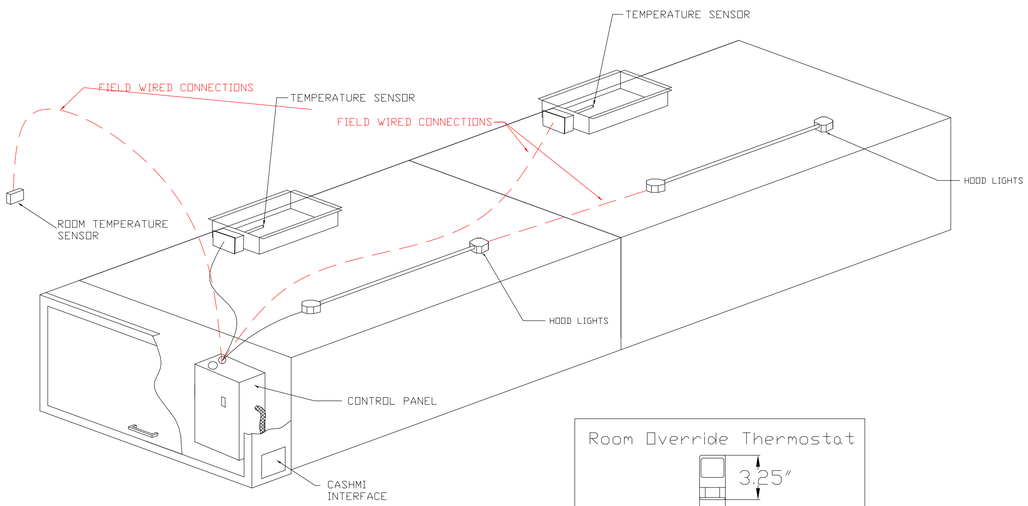

TYPICAL SC-ENERGY MANAGEMENT SYSTEM WITH HOOD MOUNTED PANEL

Room Override Thermostat

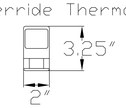

Provides room override based on temperature differential between the room and duct. Installed by electrician on a wall, 5'-6' off the finished floor, in the space but not directly under the hood or close to an appliance (including the electrical control box) so the reading is accurate for space.

Duct Temp Sensor to be installed in every exhaust riser. All Duct Temp Sensors and Hood Lights to be wired back to SC-EMS Electrical Control Box.

EMS Specification
Demand Ventilation System
Application:
The EMS Demand Ventilation System is designed to automatically reduce exhaust and supply airflow quantities, while ensuring hood performance is maintained. The EMS uses Variable Frequency Drives (VFD) and temperature sensors in the exhaust ducts to modulate the fans speed during cooking operation and maximize energy savings. The EMS LCD screen interface provides fan(s) control, system configuration, and diagnostic information.
Construction:
The EMS includes:
- A smart Controller
- LCD Screen Interface
- Duct Temperature Sensor(s)
- Room Temperature Sensor
- Variable Frequency Drive(s)

Controls will be listed by ETL to UL standard 508A.
The system includes a LCD screen interface for fan(s) and hood lights control, wash control (if applicable), gas valve reset, programmable schedule, Max Air Override function, Preparation Time mode, Cool Down mode, and diagnostics including VFD status. The LCD screen shows descriptive plain text explaining the functions or values. The LCD screen interface will be installed on the face of the hood, on the face of the utility cabinet or on the face of a wall mounted control enclosure.
Control enclosure will be NEMA 1 rated and listed for installation inside of the exhaust hood utility cabinet.
Control enclosure may be constructed of stainless steel or painted steel.
The smart controller will constantly monitor the exhaust air temperature through the riser mounted temperature sensor and modulate the fan speeds accordingly.
A room temperature sensor will also be provided for field installation in the kitchen space in order to start the fan(s) based on the temperature differential between the room and the exhaust air in the duct rather than fixed set-points.
A Preparation Time Mode is available for morning operation: dedicated make-up air will be locked out only allowing the use of transfer air during this mode. Exhaust fan(s) will run at low CFM while maintaining a balanced kitchen pressure.
A Cool Down Mode is designed for equipment cool-down period at the end of the daily cooking operations: similarly to Preparation Time mode, dedicated make-up air will be locked out only allowing the use of transfer air during this mode. Exhaust fan(s) will run at low CFM while maintaining a balanced kitchen pressure.
Fan maximum/ minimum speeds will be adjustable for proper kitchen balance. Fan direction change is also available from the smart controller configuration menu without need for rewiring.
Duct Temperature Sensor(s) will be mounted in the exhaust hood riser(s). Temperature probe will be constructed of Stainless Steel. System will be factory pre-set to modulate fan speed within a range of 45°F for 600°F and 700°F cooking applications and a range of 5°F for 400°F cooking applications. Setpoints are fully adjustable through the touch screen interface based on application needs.
The Max Air Override will have an adjustable timeout value.
The panels include color coded wiring with as-built wiring diagrams and spare terminals controlled by the fire system micro switch. The panel is factory pre-wired to shut supply fans down in a fire condition.
Options to turn ON the exhaust fans or turn off the hood lights in a fire condition will be configurable through the smart controller, but only through a password protected menu to prevent any changes after a fire inspection has been performed.

DUCT THERMISTOR SENSOR INSTALLATION
NOTE: Thermistor has 2 wires that connect to control cabinet

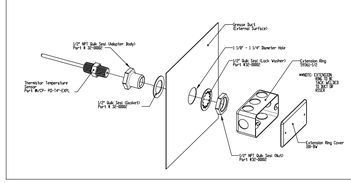

HOOD CONTROL PACKAGE INTERFACE with LCD Screen

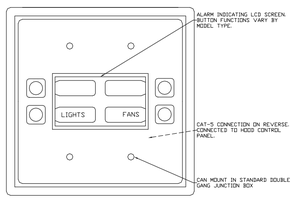

Reviewed for Code Compliance
Inspections Division
Approved with Conditions
Date: 08/19/15

CAPTIVEAIRE
www.captiveaire.com
MAINE OFFICE
PO Box 86, 179 South Rd., Topsfield, ME, 04490 PHONE: (207) 796-2590 FAX: (919) 227-5946 EMAIL: reg21@captiveaire.com

Maine Wharf Restaurant R6
PORTLAND, ME, 04101

DATE: 4/29/2015

DWG.#: 2297387

DRAWN BY: BFC-21

SCALE: 3/4" = 1'-0"

MASTER DRAWING

SHEET NO. 13

JOB NO	MODEL NUMBER	DRAWN BY	SCHEMATIC TYPE	DESCRIPTION OF OPERATION:
2297387	DCV-1111		INSTALL	Demand Control Ventilation, w/ 1 Exhaust Fan, 1 Supply Fan, Exhaust on in Fire, Lights out in Fire, Fans modulate based on duct temperature INVERTER DUTY THREE PHASE MOTOR REQUIRED. Room temperature sensor shipped loose. For field installation/verify distance between VFD and Motor; additional cost could apply if distance exceeds 50 Feet.
JOB NAME	DATE	DWG NO		
Maine Wharf Restaurant R6	4/29/2015	ECP #1-1		

BREAKER PANEL TO CONTROL PANEL
Responsibility: Electrician
BREAKER SIZE SHOWN IS THE MAXIMUM ALLOWED

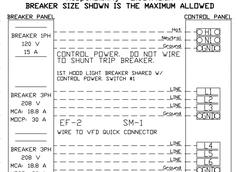

CONTROL PANEL TO ACCESSORY ITEMS
Responsibility: Electrician

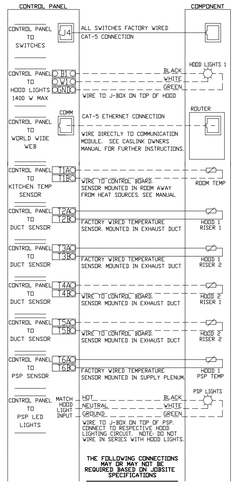

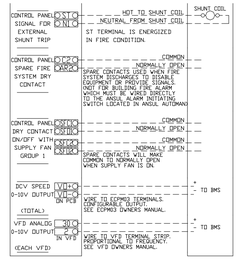

CONTROL PANEL TO FANS
Responsibility: Electrician

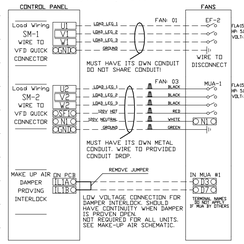

JOB NO	MODEL NUMBER	DRAWN BY	SCHEMATIC TYPE	DESCRIPTION OF OPERATION:
2297387	DCV-1111		INSTALL	Fire System #1 CORE Protection. CORE Appliance Manifold Package with Self Cleaning. Installed in Hood Utility Cabinet with integral hood preware panel.
JOB NAME	DATE	DWG NO		
Maine Wharf Restaurant R6	4/29/2015	ECP #1-2		

CORE TOTAL FLOOD PROTECTION ELECTRICAL DETAIL

04/14/2014 Rev. 10

ELECTRICIAN
1. WIRE MAIN CONTROL PANEL PER INCLUDED SCHEMATIC
2. WIRE ALL FANS PER INCLUDED SCHEMATIC
3. WIRE SHUNT TRIP BREAKER (OPTIONAL)
4. WIRE UDS APPLIANCE KILL SWITCH, IF EQUIPPED (OPTIONAL)
5. WIRE GAS VALVE

FS-1: MASTER

ELECTRICAL CONTRACTOR REQUIREMENT

ITEM	CONNECTION IN PANEL	CONNECTION IN DEVICE	VOLTAGE	AMPERAGE	COMMENTS
SHUNT TRIP BREAKER (OPTIONAL)	ST & N1	BREAKER COIL (A1 & A2)	120 VAC	< 4 AMPS	ST TO A1 ON SHUNT BREAKER COIL, AND NEUTRAL TO A2 ON SHUNT TRIP BREAKER COIL
CONTROL PANEL POWER	H1 & N1 + GROUND	CIRCUIT BREAKER	120 VAC	15 AMPS	CONTROL PANEL POWER MUST NOT BE RUN THROUGH SHUNT TRIP BREAKER
UDS APPLIANCE KILL SWITCH (OPTIONAL)	KTS & N1	KTS & N1	120 VAC	< 4 AMPS	KILL SWITCH TERMINALS MUST BE IN SERIES WITH OTHER KILL SWITCHES
REMOTE ANSUL AUTOMAN (OPTIONAL)	AU1, AU2	SOLENOID	120 VAC	< 6 AMPS	120V TO AU1, AU2 TO ANSUL ELECTRIC AUTOMAN, ANSUL SOLENOID TO NEUTRAL
GAS VALVE	25 & N1D (IF 24 VDC) (GAS & N1 (IF 120 VAC)	RED/RED/GREEN	24 VDC OR 120 VAC	< 10 AMPS	IF 24 VDC - 2 WIRES & GROUND, N1D TO RED, 25 TO RED, AND GREEN TO GROUND. IF 120 VAC - 5 WIRES & GROUND GAS TO RED, N1 TO RED, AND GREEN TO GROUND

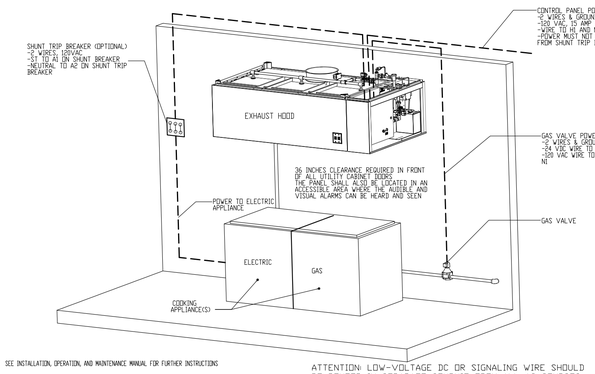

NOTE: SEE INSTALLATION, OPERATION, AND MAINTENANCE MANUAL FOR FURTHER INSTRUCTIONS

ATTENTION: LOW-VOLTAGE DC OR SIGNALING WIRE SHOULD BE ROUTED IN SEPARATE CONDUIT FROM ALL AC SOURCES.

JOB NO	MODEL NUMBER	DRAWN BY	SCHEMATIC TYPE	DESCRIPTION OF OPERATION:
2297387	DCV-1111		INSTALL	Fire System #1 CORE Protection. CORE Appliance Manifold Package with Self Cleaning. Installed in Hood Utility Cabinet with integral hood preware panel.
JOB NAME	DATE	DWG NO		
Maine Wharf Restaurant R6	4/29/2015	ECP #1-3		

CORE TOTAL FLOOD PROTECTION LOW-VOLTAGE DETAIL

09/24/2014 Rev. 11

ALARM CONTRACTOR:
1. WIRE MANUAL ACTUATION DEVICE(S), REMOTE FIRESTAT(S), CORE INTERLOCK(S), FIRE SENSOR(S) AND FIRE ALARM CONTACTS
2. COMPLETE FINAL HOOKUP OF SYSTEM
3. PERFORM FINAL FIRE SYSTEM TEST
4. FILL SURFACTANT TANK

FS-1: MASTER

ALARM CONTRACTOR REQUIREMENT

ITEM	CONNECTION IN PANEL	CONNECTION ON DEVICE	VOLTAGE	AMPERAGE	COMMENTS
MANUAL ACTUATION DEVICE(S)	101 AND 104 102 AND 103	1 & 2	24 VDC	< 10 AMPS	WIRE MANUAL ACTUATION DEVICE TERMINAL 1 BETWEEN CORE PANEL TERMINALS 102 AND 103. WIRE MANUAL ACTUATION DEVICE TERMINAL 2 BETWEEN CORE PANEL TERMINALS 101 AND 104. JUMPER 101 TO 104 AND 102 TO 103 IF NO MANUAL ACTUATION DEVICE IS INSTALLED
MANUAL ACTUATION DEVICE COVER	N/A	N/A	N/A	N/A	MANUAL ACTUATION DEVICE COVER MUST BE INSTALLED. IF SURFACE MOUNTED, USE COVER EXTENSION STI-6501B
REMOTE FIRESTAT SENSOR(S)	21 AND 24 22 AND 23	BLACK AND WHITE	24 VDC	< 10 AMPS	WIRE FIRE SENSOR BLACK WIRES BETWEEN HOOD CORE PANEL TERMINALS 22 AND 23. WIRE FIRE SENSOR WHITE WIRE BETWEEN HOOD CORE PANEL TERMINALS 21 AND 24. HIGH TEMP (842°F) #CW04427 (WHT) & #CW04427B (BLK)WIRE OR SIMILAR ONLY IF RAN OVER TOP OF HOOD; OTHERWISE BELDEN #63050L OR SIMILAR PLENUM RATED WIRE; SEE FIGURE 1
FIRE ALARM CONTACT	AL1, AL2	VARIES	50V MAX (AC/DC)	UP TO 1 AMP	FIRE ALARM RELAY CONTACTS FOR BUILDING FIRE ALARM LOCATED IN THE CORE ELECTRICAL CONTROL PANEL
CORE INTERLOCK(S)	ILA, ILB, ILC	ILA, ILB, ILC	RS-485 COMMUNICATIONS SIGNAL		CORE SYSTEM #1 ILA, TO CORE SYSTEM #2 ILA. CORE SYSTEM #1 ILB, TO CORE SYSTEM #2 ILB. CORE SYSTEM #1 ILC, TO CORE SYSTEM #2 ILC. USE BELDEN#88760 OR SIMILAR WIRE
TROUBLE CONTACT	TBC, TBL, TDK	VARIES	MAX 120 VAC	UP TO 6 AMPS	WIRE TO TBL & TBC NORMALLY OPEN CONTACT, CLOSES IN TROUBLE CONDITION
CORE COMMUNICATIONS CABLE	RJ-45 Jack	INTERNET CONNECTION	SIGNAL	<10 AMPS	TYPICAL CONNECTION CAT5 CABLE TO LOCAL AREA NETWORK VIA ETHERNET SWITCH OR WIRELESS ROUTER WITH VALID INTERNET CONNECTION

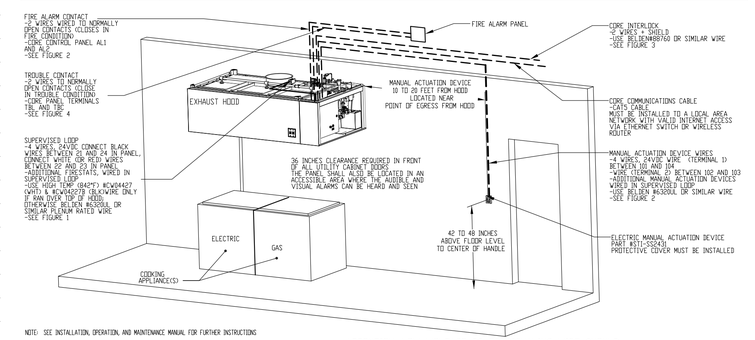

NOTE: SEE INSTALLATION, OPERATION, AND MAINTENANCE MANUAL FOR FURTHER INSTRUCTIONS

ATTENTION: LOW-VOLTAGE DC OR SIGNALING WIRE SHOULD BE ROUTED IN SEPARATE CONDUIT FROM ALL AC SOURCES.

JOB NO	MODEL NUMBER	DRAWN BY	SCHEMATIC TYPE	DESCRIPTION OF OPERATION:
2297387	DCV-1111		INSTALL	Fire System #1 CORE Protection. CORE Appliance Manifold Package with Self Cleaning. Installed in Hood Utility Cabinet with integral hood preware panel.
JOB NAME	DATE	DWG NO		
Maine Wharf Restaurant R6	4/29/2015	ECP #1-4		

CORE TOTAL FLOOD PROTECTION LOW-VOLTAGE FIGURES

09/24/2014 Rev. 11

ATTENTION: LOW-VOLTAGE DC OR SIGNALING WIRE SHOULD BE ROUTED IN SEPARATE CONDUIT FROM ALL AC SOURCES.

FS-1: MASTER

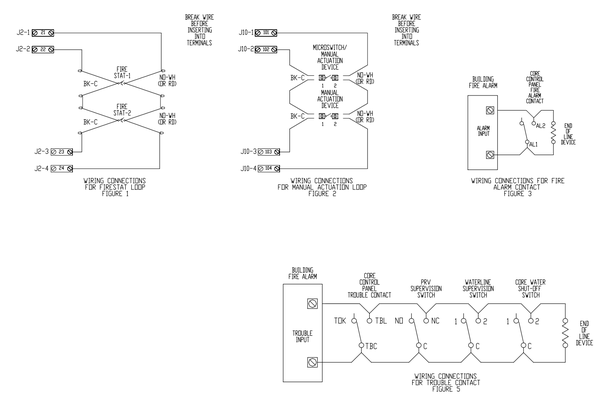

Reviewed for Code Compliance
Inspections Division
Approved with Conditions
Date: 08/19/15

CAPTIVEAIRE
www.captiveaire.com
MAINE OFFICE
PO Box 86, 179 South Rd., Topsfield, ME, 04490 PHONE: (207) 795-2590 FAX: (919) 227-5946 EMAIL: reg21@captiveaire.com

Maine Wharf Restaurant R6
PORTLAND, ME, 04101

DATE: 4/29/2015

DWG.#: 2297387

DRAWN BY: BFC-21

SCALE: 3/4" = 1'-0"

MASTER DRAWING

SHEET NO. 14

JOB NO	MODEL NUMBER	DRAWN BY	SCHEMATIC TYPE	DESCRIPTION OF OPERATION:
2297387	DCV-1111		INSTALL	Fire System #1 CORE Protection. CORE Appliance Manifold Package with Self Cleaning. Installed in Hood Utility Cabinet with integral hood preware panel.
	JOB NAME: Maine Wharf Restaurant R6	DATE: 4/29/2015	DWG NO: ECP #1-5	

CORE TOTAL FLOOD PROTECTION PLUMBING DETAIL

11/28/2014 Rev. 11

FS-1: MASTER

PLUMBER:
1. CONNECT HOT WATER LINE, PVC, COPPER OR STAINLESS STEEL PIPE ONLY
2. CONNECT HOOD DRAIN(S) STAINLESS STEEL, COPPER OR STEEL PIPE ONLY
3. CONNECT ALL END-TO-END AND BACK-TO-BACK HOOD WATER LINE CONNECTIONS (PLUMBING IS FIELD SUPPLIED FOR THIS) FIELD PLUMBING MUST NOT EXCEED HEIGHT OF VACUUM BREAKER IN MAIN UTILITY CABINET
REMOVE PLUG FROM MAIN HOOD SPRAY BAR AND CONNECT TO NEXT HOOD STAINLESS STEEL, COPPER, OR STEEL PIPE ONLY
4. PLUMB GAS VALVE
5. INSTALL FLOOR DRAIN
6. INSTALL BACKFLOW PREVENTER IF CODE REQUIRES

PLUMBING CONTRACTOR REQUIREMENT					
ITEM	CONNECTION	TEMPERATURE	PRESSURE	FLOW RATE	COMMENTS
HOT WATER LINE	3/4 INCH NPT	140 to 170°F	44 PSI TO 70 PSI	181 GPM	INSULATE HOT WATER PIPE, MINIMUM PRESSURE DEPENDENT ON LENGTH AND CONFIGERATION OF HOOD SYSTEM
HOOD DRAIN(S)	1-1/2 INCH NPT	N/A	GRAVITY DRAIN	181 GPM	2 DRAINS ON 24 INCH TALL HOODS WITH 20 INCH TALL FILTERS AND HOODS 10 FEET AND LONGER
END-TO-END CORE CONNECTION	3/4 INCH NPT	N/A	N/A	N/A	CONNECT WITH NPT PIPE, SEAL ALL THREADS, HOOD CONNECTION PROVIDED, FIELD PIPING MUST REMAIN BELOW HEIGHT OF VACUUM BREAKER
BACK-TO-BACK CORE CONNECTION	3/4 INCH NPT	N/A	N/A	N/A	CONNECT WITH NPT PIPE, SEAL ALL THREADS, HOOD CONNECTION PROVIDED
GAS VALVE	VARIES	N/A	SEE CHART	N/A	UP TO 2 INCHES NPT WITH 24V CONTROLS, 2-1/2 AND 3 INCH USE 120V CONTROL
FLOOR DRAIN(S)	1-1/2 INCH	N/A	GRAVITY DRAIN	N/A	USED TO HELP CLEAN UP FIRE SYSTEM DISCHARGE, GREASE INTERCEPTOR MAY BE REQUIRED
BACKFLOW PREVENTER DRAIN LINE (OPTIONAL)	INLET/OUTLET DRAIN	N/A	VARIES	N/A	INSTALLED WHEN PACKAGE HAS A BACKFLOW PREVENTER VALVE, SEE BACKFLOW PREVENTER VALVE MANUAL FOR DETAILS

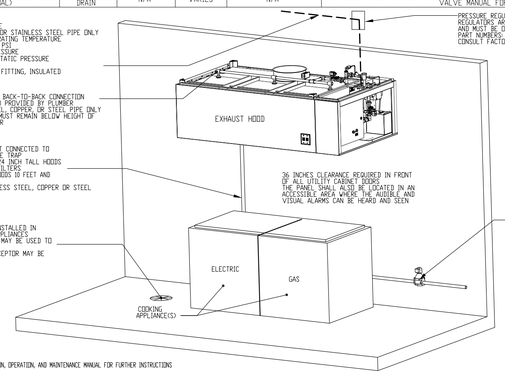

LENGHT OF HOOD (FT)	MINIMUM INLET WATER PRESSURE FOR HOT WATER (PSI)
4	30
8	30
12	30
16	30
20	31
24	32
28	34
32	37
36	39
40	42
44	46
48	50

SIZE	MAX INLET PRESSURE	VOLTAGE	BTU/HR
3/4"	25	24VDC	247,500
1"	25	24VDC	1,119,000
1-1/4"	25	24VDC	1,730,000
1-1/2"	25	24VDC	1,900,000
2"	15	24VDC	3,251,000
2-1/2"	5	120VAC	5,821,000
3"	5	120VAC	7,430,000

NOTE: SEE INSTALLATION, OPERATION, AND MAINTENANCE MANUAL FOR FURTHER INSTRUCTIONS

JOB NO	MODEL NUMBER	DRAWN BY	SCHEMATIC TYPE	DESCRIPTION OF OPERATION:
2297387	DCV-1111		INSTALL	Fire System #1 CORE Protection. CORE Appliance Manifold Package with Self Cleaning. Installed in Hood Utility Cabinet with integral hood preware panel.
	JOB NAME: Maine Wharf Restaurant R6	DATE: 4/29/2015	DWG NO: ECP #1-6	

CORE TOTAL FLOOD PROTECTION SPRINKLER DETAIL

09/02/2014 Rev. 11

FS-1: MASTER

BUILDING SPRINKLER CONTRACTOR:
1. CONNECT CORE WATER LINE TO BUILDING WET SPRINKLER SYSTEM. STAINLESS STEEL, COPPER, OR STEEL PIPE ONLY

SPRINKLER CONTRACTOR REQUIREMENT					
ITEM	CONNECTION	OPERATING PRESSURE	K-FACTOR	FLOW RATE	COMMENTS
CORE WATER SUPPLY LINE	3/4 INCH NPT	49 PSI TO 70 PSI	7.0	38.8 GPM	WATER LINE MUST BE SUPERVISED AND HAVE NO UNSUPERVISED MANUAL SHUT-OFF VALVES MINIMUM PRESSURE AND FLOWRATE DEPENDENT ON LENGTH OF HOOD SYSTEM

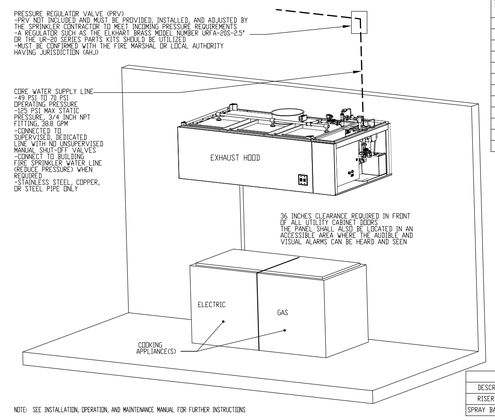

MINIMUM OPERATING PRESSURE REQUIREMENTS			
LENGTH OF HOOD (FT)	MINIMUM INLET WATER PRESSURE FOR HOT WATER (PSI)	MINIMUM INLET WATER PRESSURE FOR CORE PROTECTION (PSI)	DISCHARGE COEFFICIENTS (K-FACTOR)
4	30	30	1.3
8	30	30	2.6
12	30	30	4.0
16	30	30	5.3
20	31	33	6.4
24	32	36	7.4
28	34	39	8.3
32	37	44	9.0
36	39	49	9.7
40	42	56	10.2
44	46	63	10.6
48	50	70	11.1

TOTAL FLOWRATE = K FACTOR x PRESSURE$^{.644}$

NOZZLE HEIGHTS ABOVE HAZARD		
NOZZLE PART NUMBER	NOZZLE ABOVE HAZARD	
	MIN	MAX
3070-3/8H-SS10	30"	55"

NOZZLES FOR CORE PROTECTION			
DESCRIPTION	PART NUMBER	MACOLA	FLOW RATE
RISER NOZZLE	1/4TT+TP1530+CP1325	A0027784	2.6 GPM @ 30 PSI
SPRAY BAR NOZZLE	1/4TT+TG-4.3V	A0025166	0.7 GPM @ 30 PSI

NOTE: SEE INSTALLATION, OPERATION, AND MAINTENANCE MANUAL FOR FURTHER INSTRUCTIONS

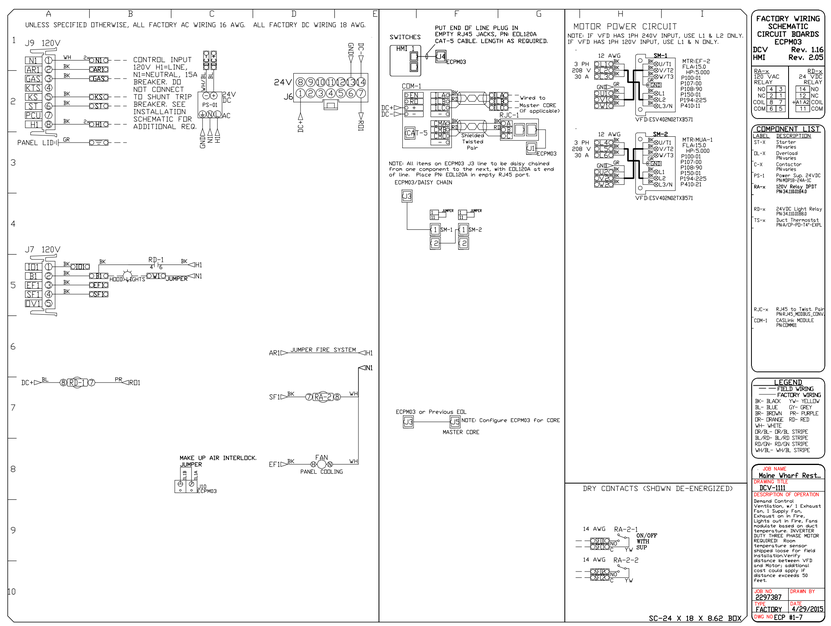

FACTORY WIRING SCHEMATIC CIRCUIT BOARDS ECPM03	
DCV	Rev. 1.16
HMI	Rev. 2.05

RA-x 120 VAC RELAY		RD-x 24 VDC RELAY
NO	4 3	T4 NO
NC	5 2	T2 NC
COIL	8 7	+B1 A2 COIL
COM	6 1	T1 COM

COMPONENT LIST

LABEL	DESCRIPTION
ST-1E	Starter Contactor Overload
SL-x	Pilot Devices
C-x	Contactor Relays
PS-1	Power Sup. 24VDC PM4DPS2-240-S
RA-x	120V Relay DPDT PN1A2B5BA4
RD-x	24VDC Light Relay PN1A1B5BB
TS-x	Duct Thermostat PN4UP-PD-T4-DPL
RJC-x	RJ45 In Test Port PN4CAD_MQ3B3_CONV
CDM-1	CAN/Line MODULE PN1DM6E

LEGEND
FIELD WIRING
FACTORY WIRING
BK- BLACK YW- YELLOW
BL- BLUE GR- GREY
BN- BROWN PU- PURPLE
OR- ORANGE RD- RED
WH- WHITE
DK/BL- DK/BL STRIPE
BL/RD- BL/RD STRIPE
RD/OR- RD/OR STRIPE
WH/BL- WH/BL STRIPE

JOB NAME: Maine Wharf Rest.
MODEL NO: DCV-1111
DESCRIPTION OF OPERATION
Demand Control Ventilation, w/ 1 Exhaust Fan. Fans turn on Exhaust on in Fire, Lights out in Fire, Fans on Exhaust in Fire, Temperature Controlled DUTY THREE PHASE MOTOR Fans, Fans with temperature sensor shipped loose for field installation, Max distance between VFD and Motor: additional cost could apply if distance exceeds 50 feet.

JOB NO	DRAWN BY
2297387	
DATE: FACTORY	DWG NO: 4/29/2015 ECP #1-7

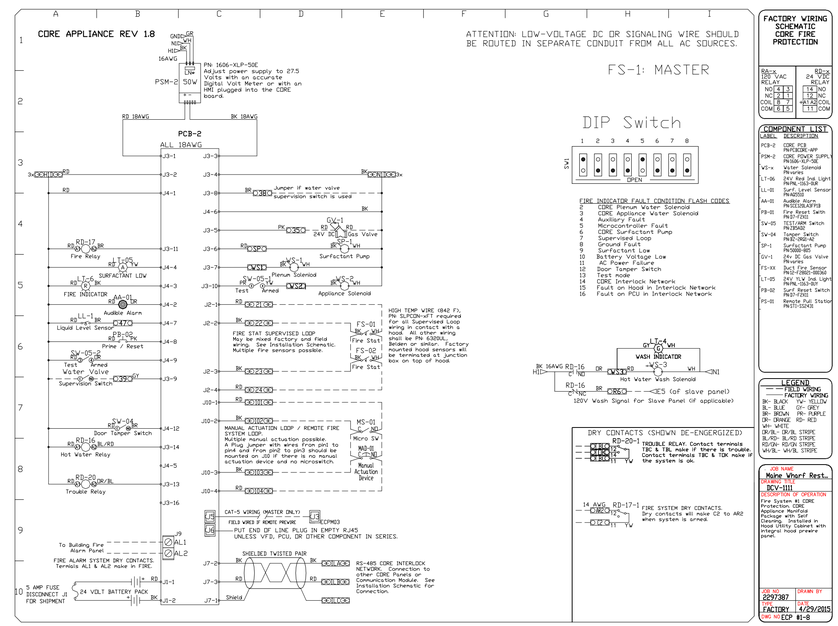

FACTORY WIRING SCHEMATIC CORE FIRE PROTECTION	

RA-x 120 VAC RELAY		RD-x 24 VDC RELAY
NO	4 3	T4 NO
NC	5 2	T2 NC
COIL	8 7	+B1 A2 COIL
COM	6 1	T1 COM

COMPONENT LIST

LABEL	DESCRIPTION
PCB-2	CORE PCB PN1TK2CBE-APP
PSM-2	CORE POWER SUPPLY PN1PS-50W-12
V2-x	Water Solenoid Pilot Valve
LT-06	24V Red Ind. Light PN1PL-153-BR
LL-01	Liquid Level Sensor PN1LS2
AA-01	Audible Alarm PN1CE10-A3F1P8
FR-01	Fire Reset Switch PN1PB-153-BL
TV-01	TEST/ARM Switch PN1TK4A2
SV-04	Tamper Switch PN1SW-153-BL
SP-1	Surfactant Pump PN1DB8-WD
GV-1	24v DC Gas Valve Pilot Valve
FS-XX	Duct Fire Sensor PN1SD-PHOTO-T
LT-05	24V YLW Ind. Light PN1PL-153-BY
FR-02	Duct Reset Switch PN1PB-153-BL
PS-01	Remote Pull Station PN1TT-S1243

LEGEND
FIELD WIRING
FACTORY WIRING
BK- BLACK YW- YELLOW
BL- BLUE GR- GREY
BN- BROWN PU- PURPLE
OR- ORANGE RD- RED
WH- WHITE
DK/BL- DK/BL STRIPE
BL/RD- BL/RD STRIPE
RD/OR- RD/OR STRIPE
WH/BL- WH/BL STRIPE

JOB NAME: Maine Wharf Rest.
MODEL NO: DCV-1111
DESCRIPTION OF OPERATION
Fire System #1 CORE Protection. CORE Appliance Manifold Package with Self Cleaning. Installed in Hood Utility Cabinet with integral hood preware panel.

JOB NO	DRAWN BY
2297387	
DATE: FACTORY	DWG NO: 4/29/2015 ECP #1-8

Reviewed for Code Compliance
Inspections Division
Approved with Conditions

Date: 08/19/15

CAPTIVEAIRE
www.captiveaire.com
MAINE OFFICE
PO Box 86, 179 South Rd., Topsfield, ME, 04490 PHONE: (207) 796-2590 FAX: (919) 227-5946 EMAIL: rep21@captiveaire.com

Maine Wharf Restaurant R6
PORTLAND, ME, 04101

DATE: 4/29/2015

DWG.#: 2297387

DRAWN BY: BFC-21

SCALE: 3/4" = 1'-0"

MASTER DRAWING

SHEET NO. 15

JOB NO	MODEL NUMBER	DRAWN BY	SCHEMATIC TYPE	DESCRIPTION OF OPERATION:
2297387	DCV-1111		INSTALL	Fire System #2 CORE Protection. CORE Appliance Manifold Package with Self Cleaning. Installed in Hood Utility Cabinet with integral hood prewire panel.
	JOB NAME: Maine Wharf Restaurant R6	DATE: 4/29/2015	DWG NO: ECP #2-1	

Fire System #1 Exhaust, Supply Fan, Exhaust on in Fire, Lights out in Fire, Fans modulate based on duct temperature. INVERTER DUTY THREE PHASE MOTOR REQUIRED. Room temperature sensor shipped loose for field installation/verify distance between VFD and Motor; additional cost could apply if distance exceeds 50 feet.

BREAKER PANEL TO CONTROL PANEL

Responsibility: Electrician

BREAKER SIZE SHOWN IS THE MAXIMUM ALLOWED

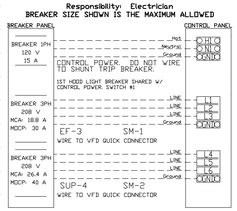

CONTROL PANEL TO FANS

Responsibility: Electrician

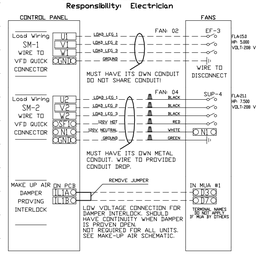

CONTROL PANEL TO ACCESSORY ITEMS

Responsibility: Electrician

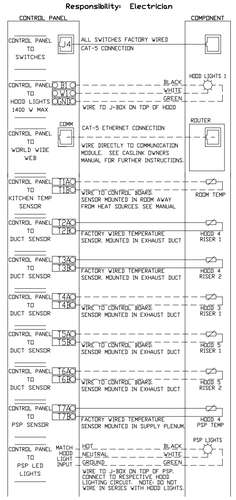

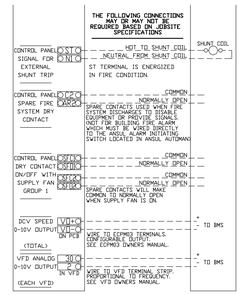

JOB NO	MODEL NUMBER	DRAWN BY	SCHEMATIC TYPE	DESCRIPTION OF OPERATION:
2297387	DCV-1111		INSTALL	Fire System #2 CORE Protection. CORE Appliance Manifold Package with Self Cleaning. Installed in Hood Utility Cabinet with integral hood prewire panel.
	JOB NAME: Maine Wharf Restaurant R6	DATE: 4/29/2015	DWG NO: ECP #2-2	

CORE TOTAL FLOOD PROTECTION ELECTRICAL DETAIL

04/14/2014 Rev. 10

ELECTRICIAN
1. WIRE MAIN CONTROL PANEL PER INCLUDED SCHEMATIC
2. WIRE ALL FANS PER INCLUDED SCHEMATIC
3. WIRE SHUNT TRIP BREAKER (OPTIONAL)
4. WIRE UDS APPLIANCE KILL SWITCH, IF EQUIPPED (OPTIONAL)
5. WIRE GAS VALVE

FS-2: MASTER

ELECTRICAL CONTRACTOR REQUIREMENT

ITEM	CONNECTION IN PANEL	CONNECTION IN DEVICE	VOLTAGE	AMPERAGE	COMMENTS
SHUNT TRIP BREAKER (OPTIONAL)	ST & N1	BREAKER COIL (A1 & A2)	120 VAC	< 4 AMPS	ST TO A1 ON SHUNT BREAKER COIL, AND NEUTRAL TO A2 ON SHUNT TRIP BREAKER COIL
CONTROL PANEL POWER	H1 & N1 + GROUND	CIRCUIT BREAKER	120 VAC	15 AMPS	CONTROL PANEL POWER MUST NOT BE RUN THROUGH SHUNT TRIP BREAKER
UDS APPLIANCE KILL SWITCH (OPTIONAL)	KTS & N1	KTS & N1	120 VAC	< 4 AMPS	KILL SWITCH TERMINALS MUST BE IN SERIES WITH OTHER KILL SWITCHES
REMOTE ANSUL AUTOMAN (OPTIONAL)	AU1, AU2	SOLENOID	120 VAC	< 6 AMPS	120V TO AU1, AU2 TO ANSUL ELECTRIC AUTOMAN; ANSUL SOLENOID TO NEUTRAL
GAS VALVE	35 & N13 (IF 24 VDC) (GAS & N1 (IF 120 VAC)	RED/RED/GREEN	24 VDC OR 120 VAC	< 10 AMPS	IF 24 VAC - 2 WIRES & GROUND NID TO RED; 35 TO RED; AND GREEN TO GROUND IF 120 VAC - 2 WIRES & GROUND GAS TO RED; N1 TO RED; AND GREEN TO GROUND

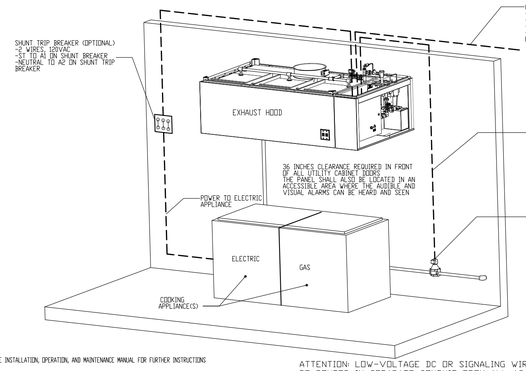

NOTE: SEE INSTALLATION, OPERATION, AND MAINTENANCE MANUAL FOR FURTHER INSTRUCTIONS

ATTENTION: LOW-VOLTAGE DC OR SIGNALING WIRE SHOULD BE ROUTED IN SEPARATE CONDUIT FROM ALL AC SOURCES.

JOB NO	MODEL NUMBER	DRAWN BY	SCHEMATIC TYPE	DESCRIPTION OF OPERATION:
2297387	DCV-1111		INSTALL	Fire System #2 CORE Protection. CORE Appliance Manifold Package with Self Cleaning. Installed in Hood Utility Cabinet with integral hood prewire panel.
	JOB NAME: Maine Wharf Restaurant R6	DATE: 4/29/2015	DWG NO: ECP #2-3	

CORE TOTAL FLOOD PROTECTION LOW-VOLTAGE DETAIL

09/24/2014 Rev. 11

ALARM CONTRACTOR
1. WIRE MANUAL ACTUATION DEVICE(S), REMOTE FIRESTAT(S), CORE INTERLOCK(S), FIRE SENSOR(S) AND FIRE ALARM CONTACTS
2. COMPLETE FINAL HOOKUP OF SYSTEM
3. PERFORM FINAL FIRE SYSTEM TEST
4. FILL SURFACTANT TANK

FS-2: MASTER

ALARM CONTRACTOR REQUIREMENT

ITEM	CONNECTION IN PANEL	CONNECTION ON DEVICE	VOLTAGE	AMPERAGE	COMMENTS
MANUAL ACTUATION DEVICE(S)	101 AND 104 102 AND 103	1 & 2	24 VDC	< 10 AMPS	WIRE MANUAL ACTUATION DEVICE TERMINAL 1 BETWEEN CORE PANEL TERMINALS 102 AND 103 WIRE MANUAL ACTUATION DEVICE TERMINAL 2 BETWEEN CORE PANEL TERMINALS 101 AND 104 JUMPER 101 TO 104 AND 102 TO 103 IF NO MANUAL ACTUATION DEVICE IS INSTALLED
MANUAL ACTUATION DEVICE COVER	N/A	N/A	N/A	N/A	MANUAL ACTUATION DEVICE COVER MUST BE INSTALLED IF SURFACE MOUNTED, USE COVER EXTENSION STI-6531B
REMOTE FIRESTAT SENSOR(S)	21 AND 24 22 AND 23	BLACK AND WHITE	24 VDC	< 10 AMPS	WIRE FIRE SENSOR BLACK WIRES BETWEEN HOOD CORE PANEL TERMINALS 22 AND 23 WIRE FIRE SENSOR WHITE WIRE BETWEEN HOOD CORE PANEL TERMINALS 21 AND 24 HIGH TEMP (842°F) #CW04427 (WHT) & #CW04428 (BLK)WIRE OR SIMILAR ONLY IF RAN OVER TOP OF HOOD; OTHERWISE BELDEN #63201, OR SIMILAR PLENUM RATED WIRE; SEE FIGURE 1
FIRE ALARM CONTACT	AL1, AL2	VARIES	50V MAX (AC/DC)	UP TO 1 AMP	FIRE ALARM RELAY CONTACTS FOR BUILDING FIRE ALARM LOCATED IN THE CORE ELECTRICAL CONTROL PANEL
CORE INTERLOCK(S)	ILA, ILB, ILC	ILA, ILB, ILC	RS-485 COMMUNICATIONS SIGNAL		CORE SYSTEM #1 ILA, TO CORE SYSTEM #2 ILA. CORE SYSTEM #1 ILB, TO CORE SYSTEM #2 ILB. CORE SYSTEM #1 ILC, TO CORE SYSTEM #2 ILC. USE BELDEN# 88760 OR SIMILAR WIRE.
TROUBLE CONTACT	TBC, TBL, TDK	VARIES	MAX 120 VAC	UP TO 6 AMPS	WIRE TO TBL & TBC NORMALLY OPEN CONTACT, CLOSES IN TROUBLE CONDITION
CORE COMMUNICATIONS CABLE	RJ-45 Jack	INTERNET CONNECTION	SIGNAL	<10 AMPS	TYPICAL CONNECTION CAT5 CABLE TO LOCAL AREA NETWORK VIA ETHERNET SWITCH OR WIRELESS ROUTER WITH VALID INTERNET CONNECTION

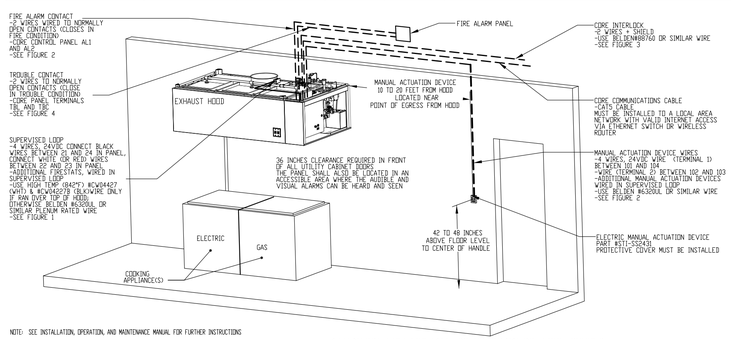

NOTE: SEE INSTALLATION, OPERATION, AND MAINTENANCE MANUAL FOR FURTHER INSTRUCTIONS

ATTENTION: LOW-VOLTAGE DC OR SIGNALING WIRE SHOULD BE ROUTED IN SEPARATE CONDUIT FROM ALL AC SOURCES.

JOB NO	MODEL NUMBER	DRAWN BY	SCHEMATIC TYPE	DESCRIPTION OF OPERATION:
2297387	DCV-1111		INSTALL	Fire System #2 CORE Protection. CORE Appliance Manifold Package with Self Cleaning. Installed in Hood Utility Cabinet with integral hood prewire panel.
	JOB NAME: Maine Wharf Restaurant R6	DATE: 4/29/2015	DWG NO: ECP #2-4	

CORE TOTAL FLOOD PROTECTION LOW-VOLTAGE FIGURES

09/24/2014 Rev. 11

ATTENTION: LOW-VOLTAGE DC OR SIGNALING WIRE SHOULD BE ROUTED IN SEPARATE CONDUIT FROM ALL AC SOURCES

FS-2: MASTER

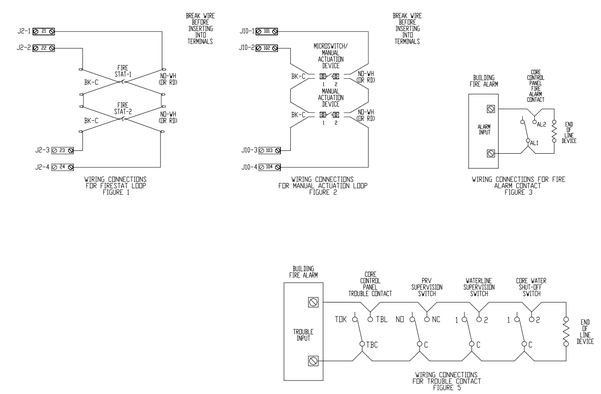

Reviewed for Code Compliance
Inspections Division
Approved with Conditions

Date: 08/19/15

CAPTIVEAIRE
www.captiveaire.com
MAINE OFFICE
PO Box 86, 179 South Rd., Topsfield, ME, 04490 PHONE: (207) 795-2590 FAX: (919) 227-5946 EMAIL: reg21@captiveaire.com

Maine Wharf Restaurant R6
PORTLAND, ME, 04101

DATE: 4/29/2015

DWG.#: 2297387

DRAWN BY: BFC-21

SCALE: 3/4" = 1'-0"

MASTER DRAWING

SHEET NO. 16

JOB NO	MODEL NUMBER	DRAWN BY	SCHEMATIC TYPE	DESCRIPTION OF OPERATION:
2297387	DCV-1111	INSTALL		Fire System #2 CORE Protection. CORE Appliance Manifold Package with Self Cleaning. Installed in Hood Utility Cabinet with integral hood preware panel.
	JOB NAME: Maine Wharf Restaurant R6	DATE: 4/29/2015	DWG NO: ECP #2-5	

CORE TOTAL FLOOD PROTECTION PLUMBING DETAIL

11/28/2014 Rev. 11

FS-2: MASTER

PLUMBER:
1. CONNECT HOT WATER LINE, PVC, COPPER OR STAINLESS STEEL PIPE ONLY
2. CONNECT HOOD DRAIN(S) STAINLESS STEEL, COPPER OR STEEL PIPE ONLY
3. CONNECT ALL END-TO-END AND BACK-TO-BACK HOOD WATER LINE CONNECTIONS (PLUMBING IS FIELD SUPPLIED FOR THIS) FIELD PLUMBING MUST NOT EXCEED HEIGHT OF VACUUM BREAKER IN MAIN UTILITY CABINET
REMOVE PLUG FROM MAIN HOOD SPRAY BAR AND CONNECT TO NEXT HOOD STAINLESS STEEL, COPPER, OR STEEL PIPE ONLY
4. PLUMB GAS VALVE
5. INSTALL FLOOR DRAIN
6. INSTALL BACKFLOW PREVENTER IF CODE REQUIRES

PLUMBING CONTRACTOR REQUIREMENT					
ITEM	CONNECTION	TEMPERATURE	PRESSURE	FLOW RATE	COMMENTS
HOT WATER LINE	3/4 INCH NPT	140 to 170°F	52 PSI TO 70 PSI	26.5 GPM	INSULATE HOT WATER PIPE, MINIMUM PRESSURE DEPENDENT ON LENGTH AND CONFIGURATION OF HOOD SYSTEM
HOOD DRAIN(S)	1-1/2 INCH NPT	N/A	GRAVITY DRAIN	26.5 GPM	2 DRAINS ON 24 INCH TALL HOODS WITH 20 INCH TALL FILTERS AND HOODS 10 FEET AND LONGER
END-TO-END CORE CONNECTION	3/4 INCH NPT	N/A	N/A	N/A	CONNECT WITH NPT PIPE, SEAL ALL THREADS, HOOD CONNECTION PROVIDED, FIELD PIPING MUST REMAIN BELOW HEIGHT OF VACUUM BREAKER
BACK-TO-BACK CORE CONNECTION	3/4 INCH NPT	N/A	N/A	N/A	CONNECT WITH NPT PIPE, SEAL ALL THREADS, HOOD CONNECTION PROVIDED
GAS VALVE	VARIES	N/A	SEE CHART	N/A	UP TO 2 INCHES NPT WITH 24V CONTROLS, 2-1/2 AND 3 INCH USE 120V CONTROL
FLOOR DRAIN(S)	1-1/2 INCH	N/A	GRAVITY DRAIN	N/A	USED TO HELP CLEAN UP FIRE SYSTEM DISCHARGE, GREASE INTERCEPTOR MAY BE REQUIRED
BACKFLOW PREVENTER DRAIN LINE (OPTIONAL)	INLET/OUTLET DRAIN	N/A	VARIES	N/A	INSTALLED WHEN PACKAGE HAS A BACKFLOW PREVENTER VALVE, SEE BACKFLOW PREVENTER VALVE MANUAL FOR DETAILS

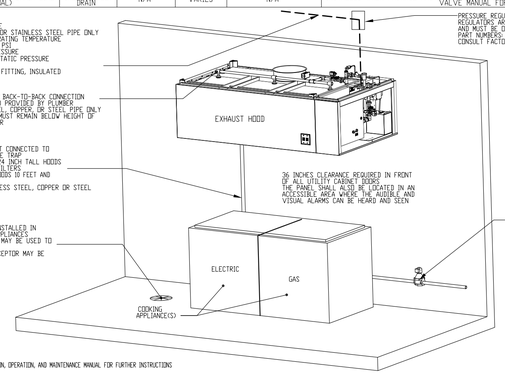

LENGHT OF HOOD (FT)	MINIMUM INLET WATER PRESSURE FOR HOT WATER (PSI)
4	30
8	30
12	30
16	30
20	31
24	32
28	34
32	37
36	39
40	42
44	46
48	50

SIZE	MAX INLET PRESSURE	VOLTAGE	BTU/HR
3/4"	25	24VDC	247,500
1"	25	24VDC	1,119,000
1-1/4"	25	24VDC	1,730,000
1-1/2"	25	24VDC	1,900,000
2"	15	24VDC	3,251,000
2-1/2"	5	120VAC	5,821,000
3"	5	120VAC	7,430,000

NOTE: SEE INSTALLATION, OPERATION, AND MAINTENANCE MANUAL FOR FURTHER INSTRUCTIONS

JOB NO	MODEL NUMBER	DRAWN BY	SCHEMATIC TYPE	DESCRIPTION OF OPERATION:
2297387	DCV-1111	INSTALL		Fire System #2 CORE Protection. CORE Appliance Manifold Package with Self Cleaning. Installed in Hood Utility Cabinet with integral hood preware panel.
	JOB NAME: Maine Wharf Restaurant R6	DATE: 4/29/2015	DWG NO: ECP #2-6	

CORE TOTAL FLOOD PROTECTION SPRINKLER DETAIL

09/02/2014 Rev. 11

FS-2: MASTER

BUILDING SPRINKLER CONTRACTOR:
1. CONNECT CORE WATER LINE TO BUILDING WET SPRINKLER SYSTEM. STAINLESS STEEL, COPPER, OR STEEL PIPE ONLY

SPRINKLER CONTRACTOR REQUIREMENT					
ITEM	CONNECTION	OPERATING PRESSURE	K-FACTOR	FLOW RATE	COMMENTS
CORE WATER SUPPLY LINE	3/4 INCH NPT	66 PSI TO 70 PSI	9.0	56.8 GPM	WATER LINE MUST BE SUPERVISED AND HAVE NO UNSUPERVISED MANUAL SHUT-OFF VALVES MINIMUM PRESSURE AND FLOWRATE DEPENDENT ON LENGTH OF HOOD SYSTEM

MINIMUM OPERATING PRESSURE REQUIREMENTS			
LENGTH OF HOOD (FT)	MINIMUM INLET WATER PRESSURE FOR HOT WATER (PSI)	MINIMUM INLET WATER PRESSURE FOR CORE PROTECTION (PSI)	DISCHARGE COEFFICIENTS (K-FACTOR)
4	30	30	1.3
8	30	30	2.6
12	30	30	4.0
16	30	30	5.3
20	31	33	6.4
24	32	36	7.4
28	34	39	8.3
32	37	44	9.0
36	39	49	9.7
40	42	56	10.2
44	46	63	10.6
48	50	70	11.1

TOTAL FLOWRATE = K FACTOR x PRESSURE$^{.644}$

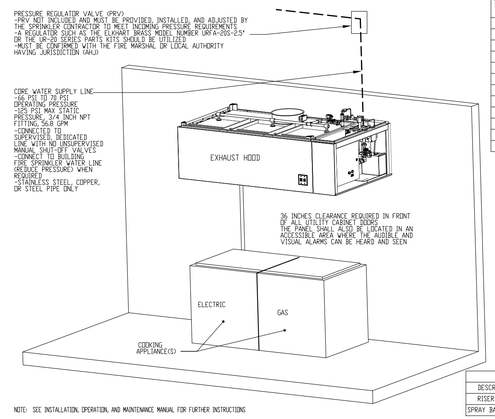

NOZZLE HEIGHTS ABOVE HAZARD		
NOZZLE PART NUMBER	NOZZLE ABOVE HAZARD	
	MIN	MAX
3070-3/8H-SS10	30"	55"

NOZZLES FOR CORE PROTECTION			
DESCRIPTION	PART NUMBER	MACOLA	FLOW RATE
RISER NOZZLE	1/4TT+TP1530+CP1325	A0002784	2.6 GPM @ 30 PSI
SPRAY BAR NOZZLE	1/4TT+TG-4.3W	A0025166	0.7 GPM @ 30 PSI

NOTE: SEE INSTALLATION, OPERATION, AND MAINTENANCE MANUAL FOR FURTHER INSTRUCTIONS

UNLESS SPECIFIED OTHERWISE, ALL FACTORY AC WIRING 16 AWG. ALL FACTORY DC WIRING 18 AWG.

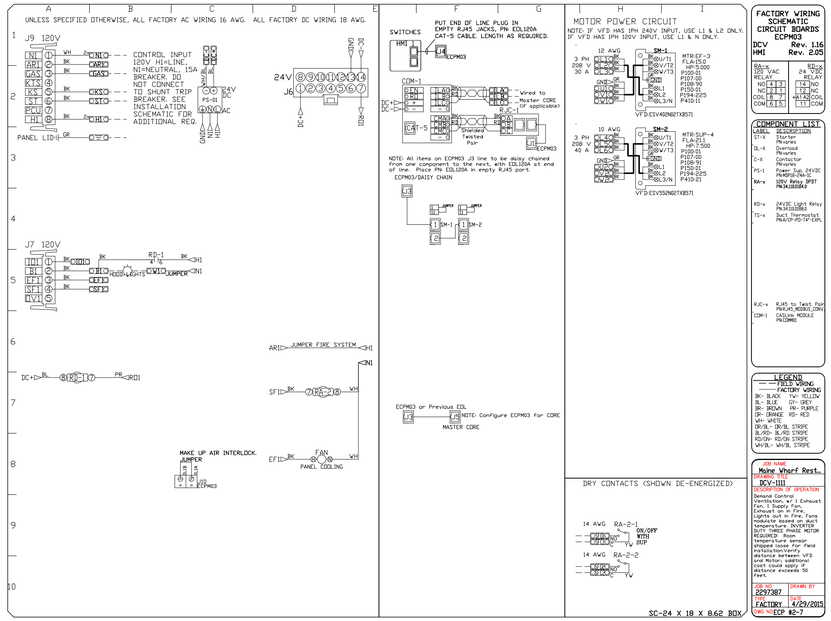

FACTORY WIRING SCHEMATIC CIRCUIT BOARDS ECPM03	
DCV	Rev. 1.16
HMI	Rev. 2.05

RA-1	RA-2
120 VAC RELAY	24 VDC RELAY
NO 4 3	T4 NO
NC 5 2	T2 NC
COM 6 7	+B1 A2 COIL
COIL 8 15	T1 COM

COMPONENT LIST

LABEL	DESCRIPTION
ST-1	Starter Contactor
DL-1	Overload Reverse
C-1	Contactor Reverse
PS-1	Power Sup. 24VDC
RA-n	120V Relay DPDT
RD-n	24VDC Light Relay
TS-n	Duct Thermostat
RJC-n	RJ45 In Test Port
CDM-1	CAN-bus MODULE

LEGEND

FIELD WIRING	FACTORY WIRING
BK- BLACK	YW- YELLOW
BL- BLUE	OR- ORANGE
BR- BROWN	PR- PURPLE
GR- GRAVE	RD- RED
WH- WHITE	
OR/BL- OR/BL STRIPE	
BL/RD- BL/RD STRIPE	
RD/OR- RD/OR STRIPE	
WH/BL- WH/BL STRIPE	

JOB NAME: Maine Wharf Rest.
MODEL NO: DCV-1111
DESCRIPTION OF OPERATION: Demand Control Ventilation, w/ 1 Exhaust Fan. Fans turn on Exhaust on in fire, Lights out in fire, Fans on in Smoke, Fans off in temperature. Includes DUTY THREE PHASE MOTOR PROTECTION. Temperature sensor shipped loose for field installation. Wire distance between VFD and Motor: additional cost could apply if distance exceeds 50 feet.

JOB NO	DRAWN BY
2297387	
DWG NO: ECP #2-7	FACTORY 4/29/2015

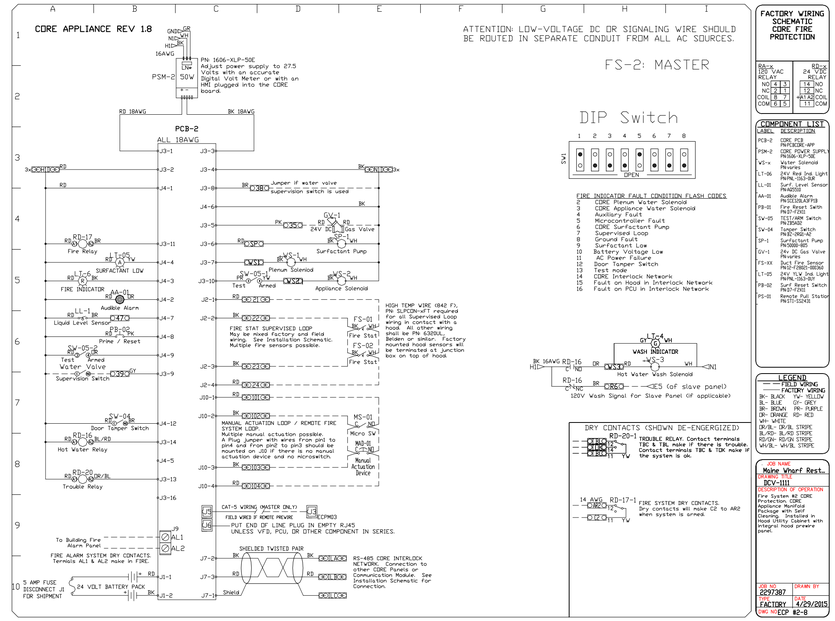

FACTORY WIRING SCHEMATIC CORE FIRE PROTECTION	
RA-n	RD-n
120 VAC RELAY	24 VDC RELAY
NO 4 3	T4 NO
NC 5 2	T2 NC
COM 6 7	+B1 A2 COIL
COIL 8 15	T1 COM

COMPONENT LIST

LABEL	DESCRIPTION
PCB-2	CORE PCB PN7130CBR-WPP
PSM-2	CORE POWER SUPPLY PN1606-XLP-50E
V1-n	Water Solenoid Reverse
LT-06	24V Red Ind. Light PN7NL-153-BR
LL-01	Liquid Level Sensor PN4000
AA-01	Audible Alarm PN3230LA3P1FB
FR-01	Fire Reset Switch PN7100-00
TV-01	TEST/ARM Switch PN7130KB2
SV-04	Tamper Switch PN7AS-274-AG
SP-1	Surfactant Pump PN7000-005
GV-1	24v DC Gas Valve Reverse
FS-XX	Duct Fire Sensor PN7SD-400-PHOTO
LT-05	24V YLW Ind. Light PN7NL-153-BY
FR-02	Duct Reset Switch PN7100-00
PS-01	Remote Pull Station PN7TI-52243

LEGEND

FIELD WIRING	FACTORY WIRING
BK- BLACK	YW- YELLOW
BL- BLUE	OR- ORANGE
BR- BROWN	PR- PURPLE
GR- GRAVE	RD- RED
WH- WHITE	
OR/BL- OR/BL STRIPE	
BL/RD- BL/RD STRIPE	
RD/OR- RD/OR STRIPE	
WH/BL- WH/BL STRIPE	

JOB NAME: Maine Wharf Rest.
MODEL NO: DCV-1111
DESCRIPTION OF OPERATION: Fire System #2 CORE Protection. CORE Appliance Manifold Package with Self Cleaning. Installed in Hood Utility Cabinet with integral hood preware panel.

JOB NO	DRAWN BY
2297387	
DWG NO: ECP #2-8	FACTORY 4/29/2015

Reviewed for Code Compliance
Inspections Division
Approved with Conditions

Date: 08/19/15

CAPTIVEAIRE
www.captiveaire.com
MAINE OFFICE
PO Box 86, 179 South Rd., Topsfield, ME, 04490 PHONE: (207) 796-2590 FAX: (919) 227-5946 EMAIL: rep21@captiveaire.com

Maine Wharf Restaurant R6
PORTLAND, ME, 04101

DATE: 4/29/2015

DWG.#: 2297387

DRAWN BY: BFC-21

SCALE: 3/4" = 1'-0"

MASTER DRAWING

SHEET NO. 17

System Design Verification (SDV)

If ordered, CAS Service will perform a System Design Verification (SDV) once all equipment has had a complete start up per the Operation and Installation Manual. Typically, the SDV will be performed after all inspections are complete.

Any field related discrepancies that are discovered during the SDV will be brought to the attention of the general contractor and corresponding trades on site. These issues will be documented and forwarded to the appropriate sales office. If CAS Service has to resolve a discrepancy that is a field issue, the general contractor will be notified and billed for the work. Should a return trip be required due to any field related discrepancy that cannot be resolved during the SDV, there will be additional trip charges.

During the SDV, CAS Service will address any discrepancy that is the fault of the manufacturer. Should a return trip be required, the general contractor and appropriate sales office will be notified. There will be no additional charges for manufacturer discrepancies.

Reviewed for Code Compliance
Inspections Division
Approved with Conditions
Date: 08/19/15

CAPTIVEAIRE
www.captiveaire.com
MAINE OFFICE
PO Box 86, 179 South Rd., Topsfield, ME, 04490 PHONE: (207) 796-2590 FAX: (919) 227-5946 EMAIL: reg21@captiveaire.com

Maine Wharf Restaurant R6
PORTLAND, ME, 04101

DATE: 4/29/2015

DWG.#: 2297387

DRAWN BY: BFC-21

SCALE: 3/4" = 1'-0"

MASTER DRAWING

SHEET NO.
18