Reviewed for Code Compliance
Inspections Division
Approved with Conditions

Date: 06/25/15

| | SWITCHES | | OPTION | FANS CONTROLLED | | | | | |
|---|---|---|---|---|---|---|---|---|---|
| | LOCATION | QUANTITY | | FAN TAG | TYPE | # | H.P. | VOLT | FLA |
| efs | Utility Cabinet Left | 1 Light | Smart Controls DCV | EF-2 | Exhaust | 3 | 5.000 | 208 | 15.0 |
| | Hood # 1 | 1 Fan | | MUA-1 | Supply | 3 | 5.000 | 208 | 15.0 |
| ght | Utility Cabinet Right | 1 Light | Smart Controls DCV | EF-3 | Exhaust | 3 | 3.000 | 208 | 15.0 |
| | Hood # 4 | 1 Fan | | MUA-2 | Supply | 3 | 7.500 | 208 | 25.1 |

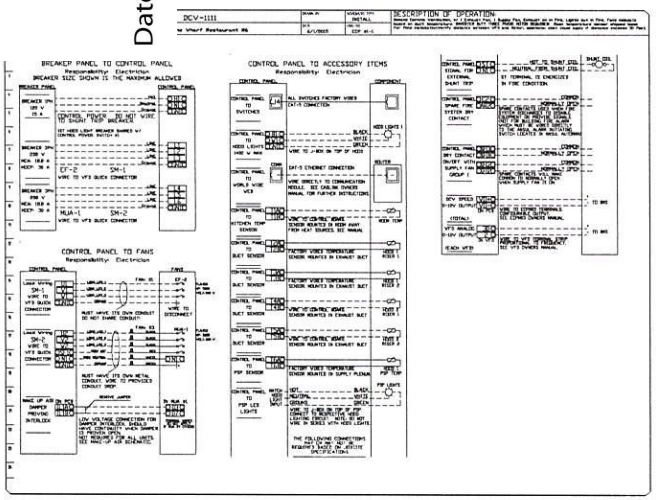


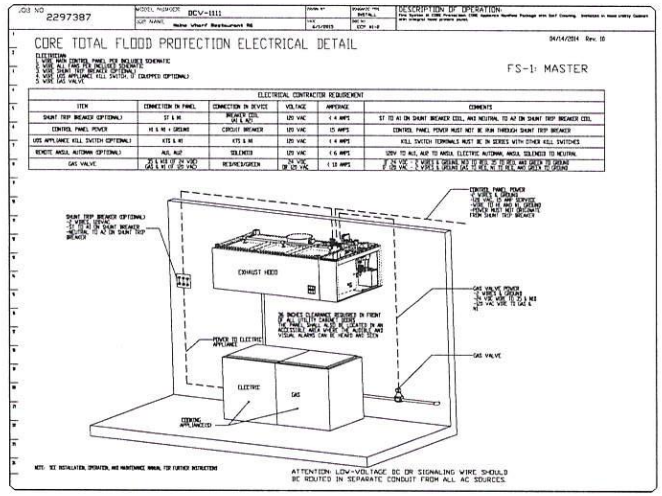


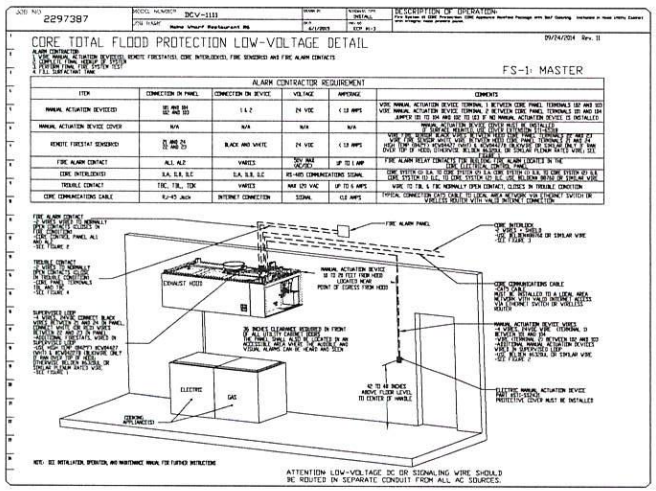


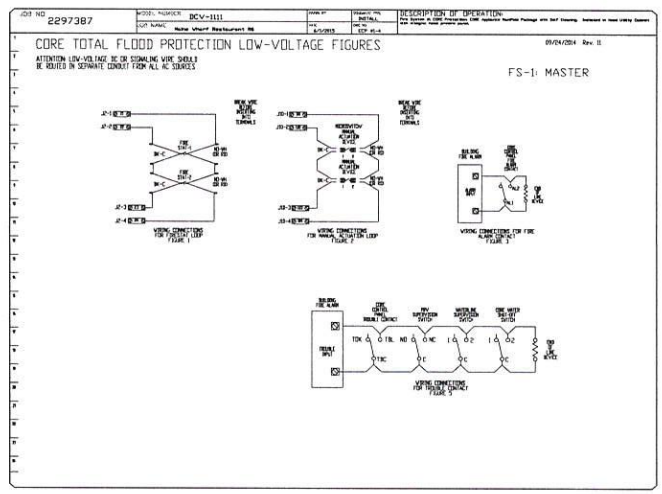


REVISIONS

| DESCRIPTION | DATE |
|---|---|
| | |
| | |
| | |
| | |


CAPTIVE AIRE
MAINE OFFICE
PO Box 86, 179 South Rd., Topsham, ME, 04086 PHONE: (207) 796-2590 FAX: (919) 227-5945 EMAIL: rsg21@capitveaire.com
www.captiveaire.com


Maine Wharf Restaurant R6
PORTLAND, ME, 04101

DATE: 6/1/2015

DWG.#: 2297387

DRAWN BY: BFC-21

SCALE: 3/4" = 1'-0"

MASTER DRAWING

SHEET NO. 12