JOB NO	MODEL NUMBER	DRAWN BY	SCHEMATIC TYPE	DESCRIPTION OF OPERATION:
1934403	SC-EMS1111		INSTALL	Fire System #2 CORE Protection. CORE Appliance Manifold Package with Self Cleaning. Installed in Hood Utility Cabinet with integral hood pressure panel.
	JOB NAME: Maine Wharf Restaurant	DATE: 12/18/2013	DWG NO: ECP #2-5	

CORE TOTAL FLOOD PROTECTION PLUMBING DETAIL

05/08/2013 Rev. 8

FS-2: MASTER

PLUMBER:
1. CONNECT HOT WATER LINE; PVC, COPPER OR STAINLESS STEEL PIPE ONLY
2. CONNECT HOOD DRAINS(2) STAINLESS STEEL, COPPER, OR STEEL PIPE ONLY
3. CONNECT ALL END-TO-END AND BACK-TO-BACK HOOD WATER LINE CONNECTIONS (PLUMBING IS FIELD SUPPLIED FOR THIS) FIELD PLUMBING MUST NOT EXCEED HEIGHT OF VACUUM BREAKER IN MAIN UTILITY CABINET
4. REMOVE PLUG FROM MAIN HOOD SPRAY BAR AND CONNECT TO NEXT HOOD STAINLESS STEEL, COPPER, OR STEEL PIPE ONLY
5. PLUMB GAS VALVE
6. INSTALL FLOOR DRAIN
7. INSTALL BACKFLOW PREVENTER IF CODE REQUIRES

PLUMBING CONTRACTOR REQUIREMENT					
ITEM	CONNECTION	TEMPERATURE	PRESSURE	FLOW RATE	COMMENTS
HOT WATER LINE	3/4 INCH NPT	140 to 170°F	32 PSI TO 70 PSI	16.7 GPM	INSULATE HOT WATER PIPE. MINIMUM PRESSURE DEPENDANT ON LENGTH OF HOOD SYSTEM
HOOD DRAIN(S)	1-1/2 INCH NPT	N/A	GRAVITY DRAIN	16.7 GPM	2 DRAINS ON 24 INCH TALL HOODS WITH 20 INCH TALL FILTERS AND HOODS 10 FEET AND LONGER
END-TO-END CORE CONNECTION	3/4 INCH NPT	N/A	N/A	N/A	CONNECT WITH NPT PIPE. SEAL ALL THREADS. HOOD CONNECTION PROVIDED. FIELD PIPING MUST REMAIN BELOW HEIGHT OF VACUUM BREAKER
BACK-TO-BACK CORE CONNECTION	3/4 INCH NPT	N/A	N/A	N/A	CONNECT WITH NPT PIPE. SEAL ALL THREADS. HOOD CONNECTION PROVIDED
GAS VALVE	VARIES	N/A	SEE CHART	N/A	UP TO 2 INCHES NPT WITH 24V CONTROLS. 2-1/2 AND 3 INCH USE 120V CONTROL
FLOOR DRAIN(S)	1-1/2 INCH	N/A	GRAVITY DRAIN	N/A	USED TO HELP CLEAN UP FIRE SYSTEM DISCHARGE. GREASE INTERCEPTOR MAY BE REQUIRED
BACKFLOW PREVENTER DRAIN LINE (OPTIONAL)	INLET/OUTLET DRAIN	N/A	VARIES	N/A	INSTALLED WHEN PACKAGE HAS A BACKFLOW PREVENTER VALVE. SEE BACKFLOW PREVENTER VALVE MANUAL FOR DETAILS

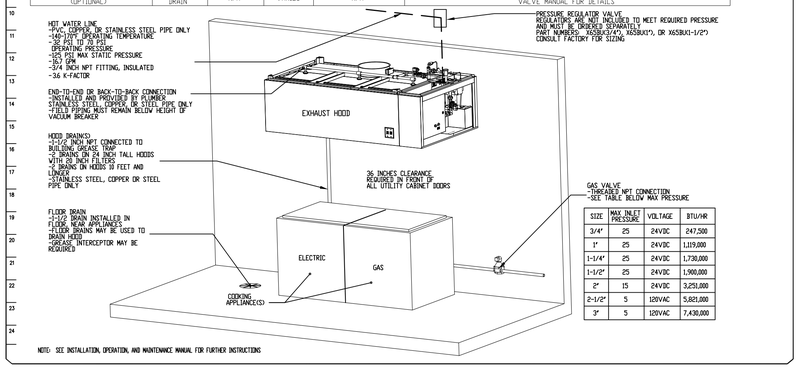

SIZE	MAX INLET PRESSURE	VOLTAGE	BTU/HR
3/4"	25	24VDC	247,500
1"	25	24VDC	1,119,000
1-1/4"	25	24VDC	1,730,000
1-1/2"	25	24VDC	1,900,000
2"	15	24VDC	3,251,000
2-1/2"	5	120VAC	5,821,000
3"	5	120VAC	7,430,000

NOTE: SEE INSTALLATION, OPERATION, AND MAINTENANCE MANUAL FOR FURTHER INSTRUCTIONS

JOB NO	MODEL NUMBER	DRAWN BY	SCHEMATIC TYPE	DESCRIPTION OF OPERATION:
1934403	SC-EMS1111		INSTALL	Fire System #2 CORE Protection. CORE Appliance Manifold Package with Self Cleaning. Installed in Hood Utility Cabinet with integral hood pressure panel.
	JOB NAME: Maine Wharf Restaurant	DATE: 12/18/2013	DWG NO: ECP #2-6	

CORE TOTAL FLOOD PROTECTION SPRINKLER DETAIL

05/08/2013 Rev. 8

FS-2: MASTER

BUILDING SPRINKLER CONTRACTOR:
1. CONNECT CORE WATER LINE TO BUILDING WET SPRINKLER SYSTEM. STAINLESS STEEL, COPPER, OR STEEL PIPE ONLY

SPRINKLER CONTRACTOR REQUIREMENT					
ITEM	CONNECTION	OPERATING PRESSURE	K-FACTOR	FLOW RATE	COMMENTS
CORE WATER SUPPLY LINE	3/4 INCH NPT	41 PSI TO 70 PSI	7.0	35.9 GPM	WATER LINE MUST BE SUPERVISED AND HAVE NO UNSUPERVISED MANUAL SHUT-OFF VALVES. MINIMUM PRESSURE AND FLOWRATE DEPENDENT ON LENGTH OF HOOD SYSTEM

MINIMUM OPERATING PRESSURE REQUIREMENTS			
LENGTH OF HOOD (FT)	MINIMUM INLET WATER PRESSURE FOR SELF CLEANING (PSI)	MINIMUM INLET WATER PRESSURE FOR CORE PROTECTION (PSI)	DISCHARGE COEFFICIENTS (K-FACTOR)
4	30	30	1.3
8	30	30	2.6
12	30	30	4.0
16	30	30	5.3
20	31	33	6.4
24	32	36	7.4
28	34	39	8.3
32	37	44	9.0
36	39	49	9.7
40	42	56	10.2
44	46	63	10.6
48	50	70	11.1

TOTAL FLOWRATE = K FACTOR x PRESSURE$^{.54}$

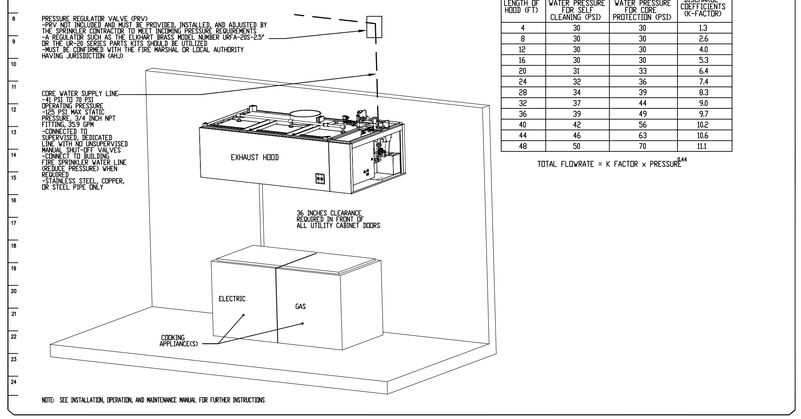

NOTE: SEE INSTALLATION, OPERATION, AND MAINTENANCE MANUAL FOR FURTHER INSTRUCTIONS

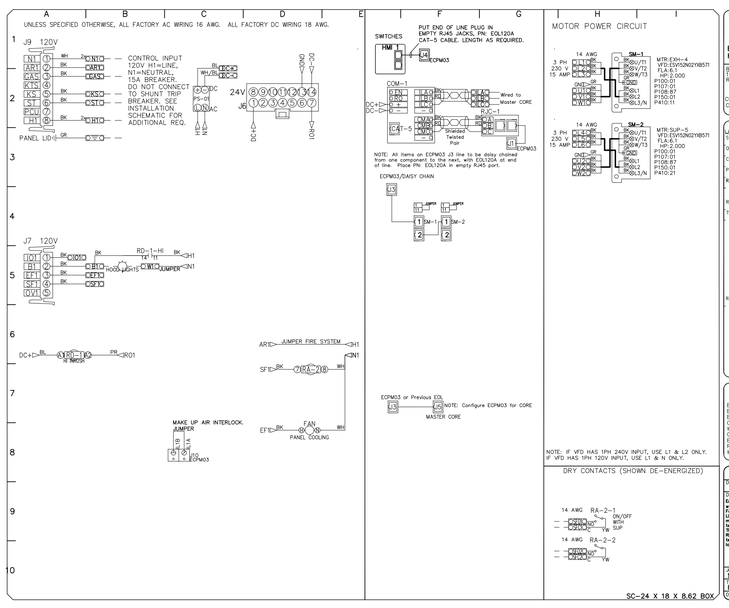

FACTORY WIRING SCHEMATIC CIRCUIT BOARDS CCPMO3
EMS Rev. 1.11
HMI Rev. 2.01

COMPONENT LIST

LABEL	DESCRIPTION
SM-1	Starter Pilcwires
SM-2	Starter Pilcwires
OL-K	Overload Pilcwires
C-K	Contactor Pilcwires
PS-1	Power Sup. 24VDC 120V IN
RA-1x	120V Relay DPDT PN:24.110.5M.G
RD-1-HI	24VDC High Inrush PN:TBR-12A-High-In.
TS-1x	Duct Thermostat PN:KCP-PD-74"-LBPL
RJC-1x	RJ45 to Twist Pair PN:RJC_W300U_CONN

LEGEND
FIELD WIRING
FACTORY WIRING
BK- BLACK YW- YELLOW
BL- BLUE GY- GREY
BR- BROWN PR- PURPLE
OR- ORANGE RD- RED
WH- WHITE
GR/BL- GR/BL STRPE
BL/YL- BL/YL STRPE
RD/GR- RD/GR STRPE
WH/BL- WH/BL STRPE

JOB NAME: Maine Wharf Rest...
JOB NO: SC-EMS1111
DESCRIPTION OF OPERATION: Energy Management System w/ 1 Exhaust Fan, 1 Supply Fan, Lighting, Fire Alarm. Lights out in Fire. Fans modulate based on duct temperature. Fans are DUTY SHEET PHASE MOTOR REQUIRED. Room temperature sensor shipped loose for field installation.

JOB NO	DRAWN BY
1934403	
DATE	REV
FACTORY	12/18/2013
DWG NO: ECP #2-7	

SC-24 X 18 X 8.62 BOX

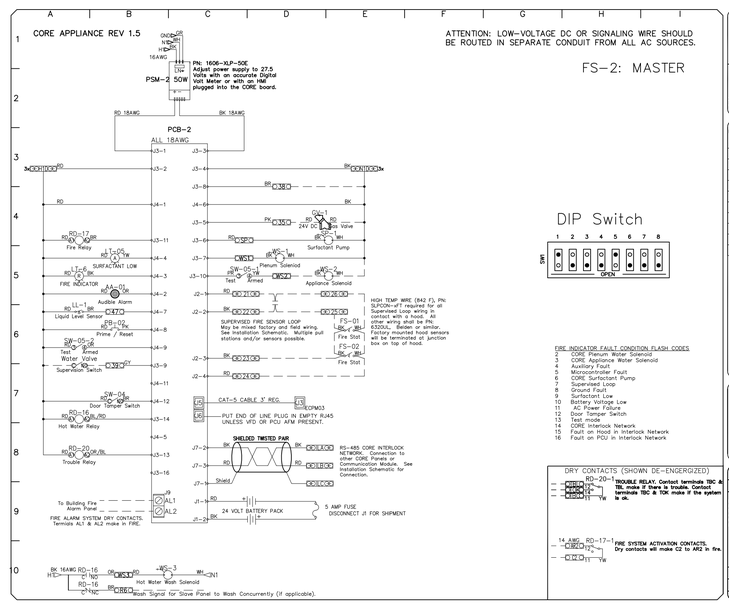

ATTENTION: LOW-VOLTAGE DC OR SIGNALING WIRE SHOULD BE ROUTED IN SEPARATE CONDUIT FROM ALL AC SOURCES.

FS-2: MASTER

DIP Switch

FIRE INDICATOR FAULT CONDITION FLASH CODES
2 CORE Plenum Water Solenoid
3 CORE Appliance Water Solenoid
4 Auxiliary Fault
5 Microcontroller Fault
6 CORE Surfactant Pump
7 Surfactant Low
8 Ground Fault
9 Surfactant Low
10 Battery Voltage Low
11 AC Power Failure
12 Door Tamper Switch
13 Test mode
14 Fault on Interlock Network
15 Fault on Hood in Interlock Network
16 Fault on PCU in Interlock Network

DRY CONTACTS (SHOWN DE-ENGERGIZED)
RD-20-1 TROUBLE RELAY. Contact terminals TBC & TBL make if there is trouble. Contact terminals TBC & TOK make if the system is ok.
14 AWG RD-17-1 FIRE SYSTEM ACTIVATION CONTACTS. Dry contacts will make C2 to AR2 in fire.

FACTORY WIRING SCHEMATIC CORE FIRE PROTECTION

COMPONENT LIST

LABEL	DESCRIPTION
PCB-2	CORE PCB-2 PN:PCB-2
PSM-2	CORE POWER SUPPLY PN:150R-xLP-5SE
WS-x	Water Solenoid PN:WS-x
LT-DR	24V Red Int. Light PN:PNL-1RZ-SUF
LL-01	Surf. Level Sensor PN:LL-01
AA-01	Audible Alarm PN:SG2120LAXFPIB
PB-01	Fire Reset Switch PN:PB-01
SW-05	TEST/ARM Switch PN:SW40
SW-04	Tamper Switch PN:SW-04
SP-1	Surfactant Pump PN:SP-1
GV-1	24v DC Gas Valve Pilcwires

LEGEND
FIELD WIRING
FACTORY WIRING
BK- BLACK YW- YELLOW
BL- BLUE GY- GREY
BR- BROWN PR- PURPLE
OR- ORANGE RD- RED
WH- WHITE
GR/BL- GR/BL STRPE
BL/YL- BL/YL STRPE
RD/GR- RD/GR STRPE
WH/BL- WH/BL STRPE

JOB NAME: Maine Wharf Rest...
JOB NO: SC-EMS1111
DESCRIPTION OF OPERATION: Fire System #2 CORE Protection. CORE Appliance Manifold Package with Self Cleaning. Installed in Hood Utility Cabinet with integral hood pressure panel.

JOB NO	DRAWN BY
1934403	
DATE	REV
FACTORY	12/18/2013
DWG NO: ECP #2-8	

REVISIONS

DESCRIPTION	DATE:

CAPTIVEAIRE
www.captiveaire.com
MAINE OFFICE
PO Box 86, 179 South Rd., Topsfield, ME. 04490 PHONE: (207) 796-2590 FAX: (919) 227-5946 EMAIL: reg21@captiveaire.com

Maine Wharf Restaurant
PORTLAND, ME

DATE: 12/18/2013

DWG.#: 1934403

DRAWN BY: BFC-21

SCALE: 3/4" = 1'-0"

MASTER DRAWING

SHEET NO. 15