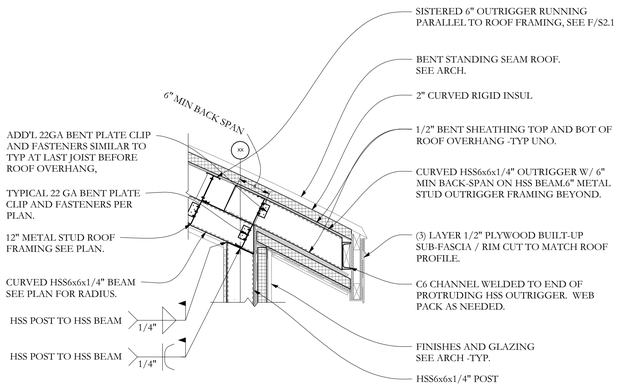

SECTION G S-2.1 3/4"=1'-0

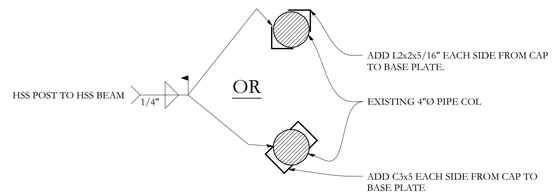

DETAIL H S-2.1 1 1/2"=1'-0

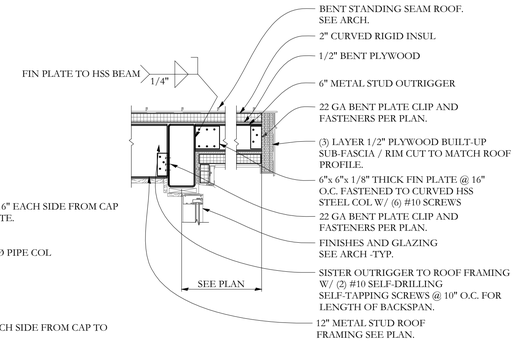

SECTION I S-2.1 3/4"=1'-0

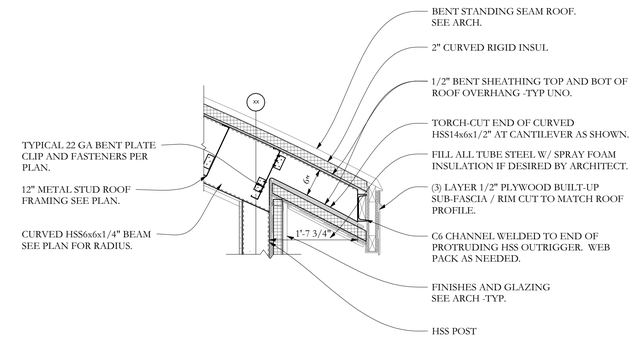

SECTION K S-2.1 3/4"=1'-0

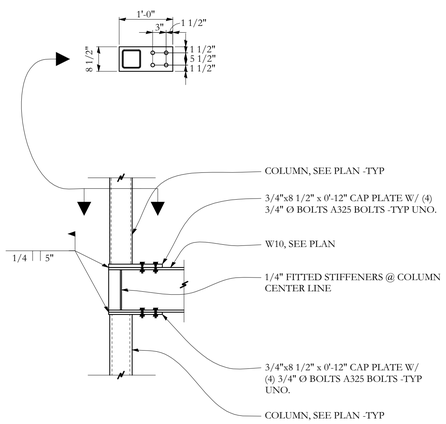

SECTION D S-2.1 3/4" = 1'-0"

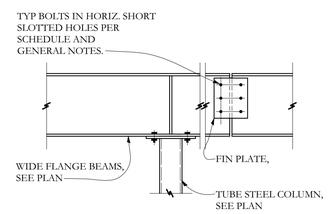

TYPICAL BEAM WEB SPLICE CONNECTION

SECTION E S-2.1 3/4"=1'-0

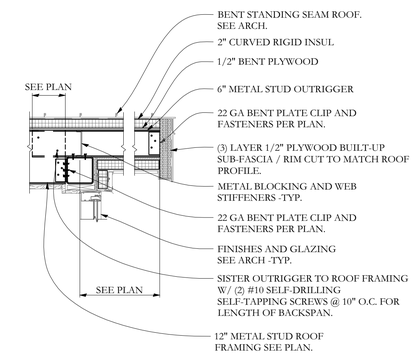

SECTION F S-2.1 3/4"=1'-0

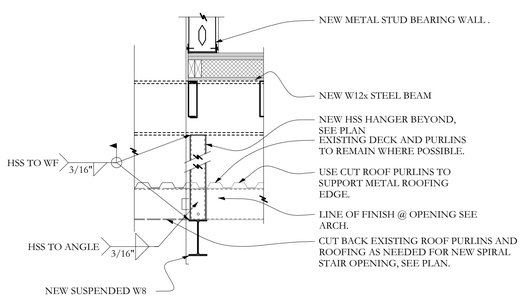

SECTION A S2.1 3/4"=1'-0

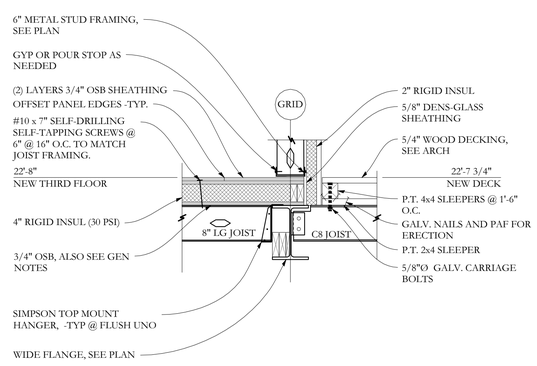

SECTION B S2.1 3/4"=1'-0

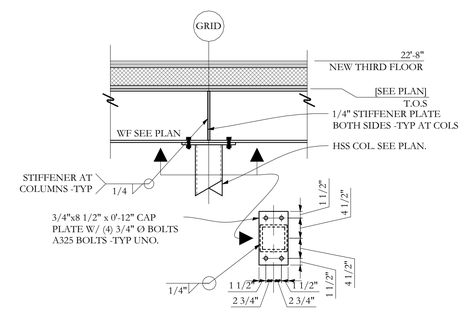

SECTION C S2.1 3/4"=1'-0

1
REV. 07-26-13

STATE OF MAINE
AARON C. JONES
No. 10968
LICENSED
PROFESSIONAL ENGINEER
05/28/14
6/5/13

Reviewed for Code Compliance
Inspection Division
Inspection Services

Prepared For:

Consultant:
Structural Integrity
Consulting Engineers
77 Oak Street
Portland, ME, 04101
p. 207-774-4614
f. 866-793-7835
www.structuralintegrity.com
BUILD WITH CONFIDENCE
© 2011 Aaron C. Jones, PE
SI# 13-0052

Architect:
ARCHETYPE architects
48 Union Wharf Portland, Maine 04101
(207) 772-6022 Fax (207) 772-4056

Project:
MAINE WHARF
OFFICE RENOVATION
BUILDING B
68 COMMERCIAL ST.
PORTLAND, MAINE

Revisions:
1. 07-26-13

Scale: 1/4" = 1'-0"

Date: 06-05-13

SECTIONS

S2.1