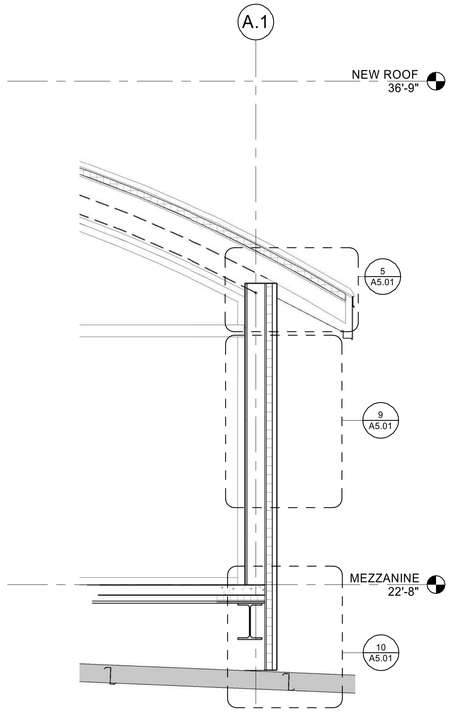

1 | WALL SECTION 1
1/2" = 1'-0"

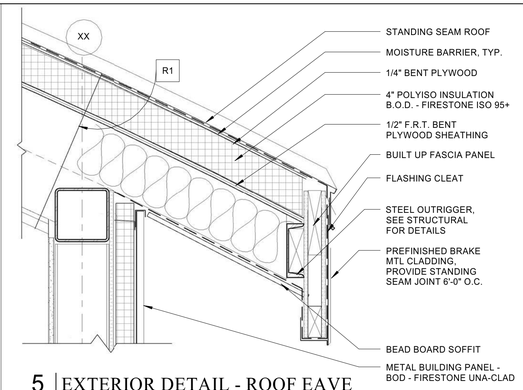

5 | EXTERIOR DETAIL - ROOF EAVE
1 1/2" = 1'-0"

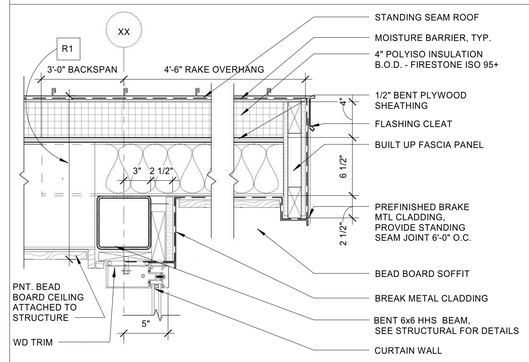

4 | EXTERIOR DETAIL - ROOF RAKE
1 1/2" = 1'-0"

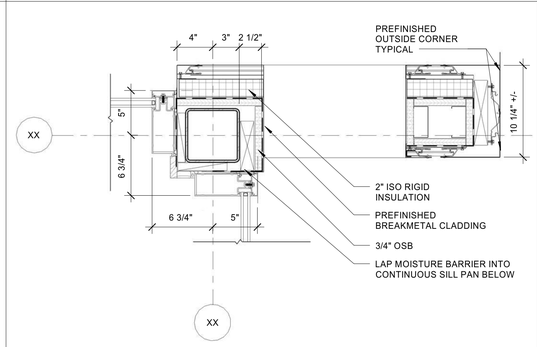

6 | ENVELOP DETAILS - CORNER W/ WING WALL
1 1/2" = 1'-0"

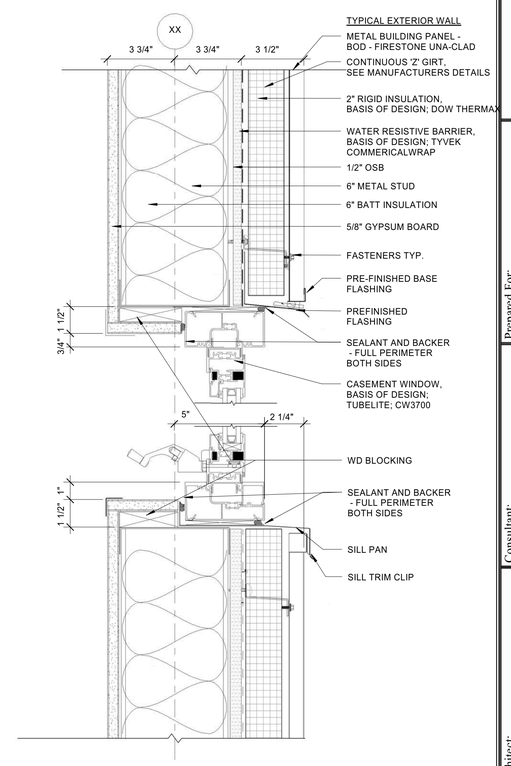

9 | EXTERIOR DETAIL - WINDOW HEAD/SILL
3" = 1'-0"

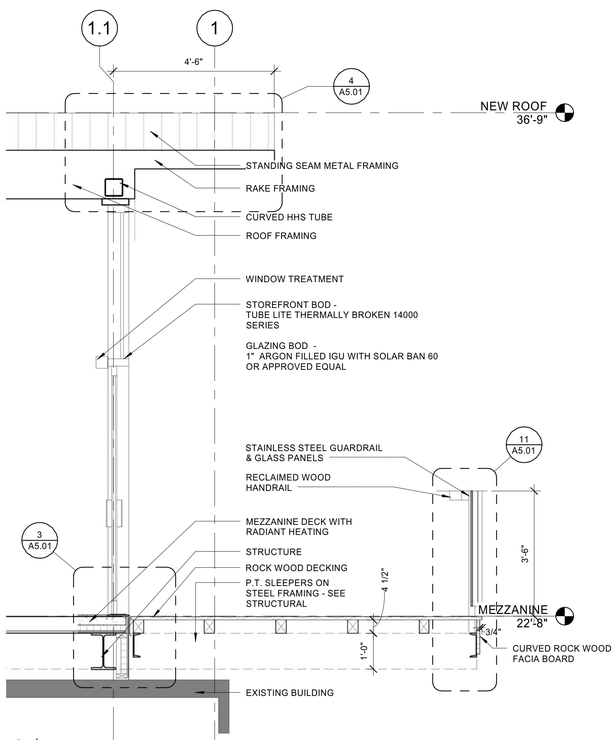

2 | WALL SECTION 2
1/2" = 1'-0"

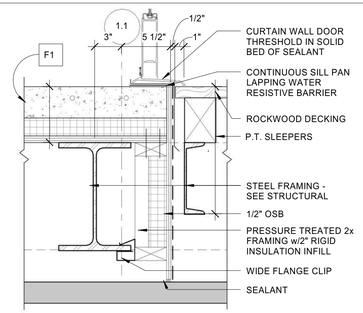

3 | EXTERIOR DETAILS - DOOR THRESHOLD
1 1/2" = 1'-0"

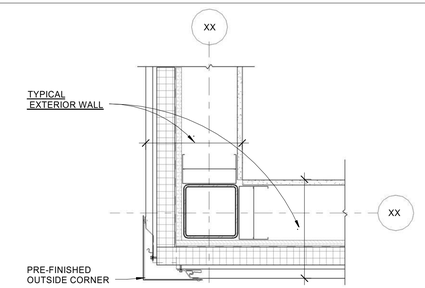

7 | ENVELOP DETAILS - CORNER
1 1/2" = 1'-0"

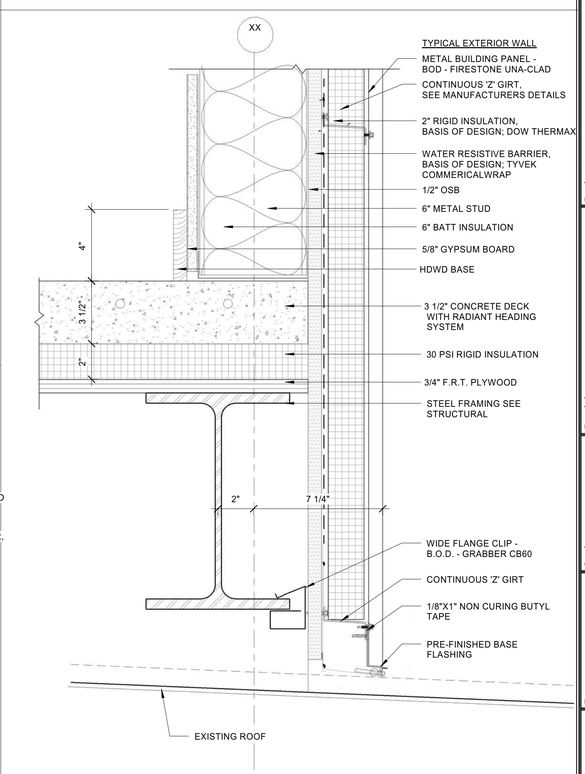

10 | EXTERIOR DETAIL - BASE OF WALL
3" = 1'-0"

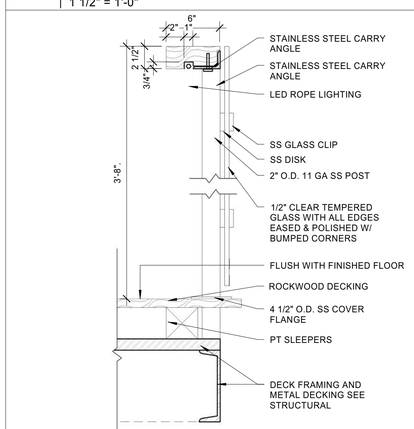

11 | RAILING DETAIL - MEZZ. LEVEL
1 1/2" = 1'-0"

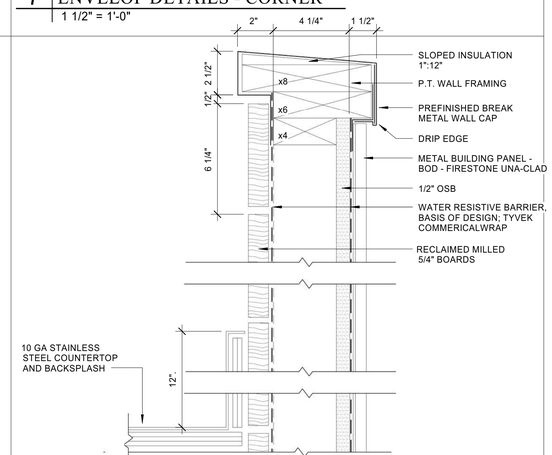

8 | EXTERIOR DETAILS - COOKWALL DETAIL
3" = 1'-0"

Reviewed for Code Compliance
Inspection Division
Portland, Maine
Date: 05/28/14

Prepared For:
MAINE WHARF LLC

Consultant:

Architect:
ARCHETYPE architects
48 Union Wharf Portland, Maine 04101
(207) 772-6022 Fax (207) 772-4056

Project:
MAINE WHARF
OFFICE RENOVATION
BUILDING B
68 COMMERCIAL STREET,
PORTLAND ME

Revisions:

Scale: As indicated

Date: 21 JUNE 2013

EXTERIOR DETAILS

A5.01