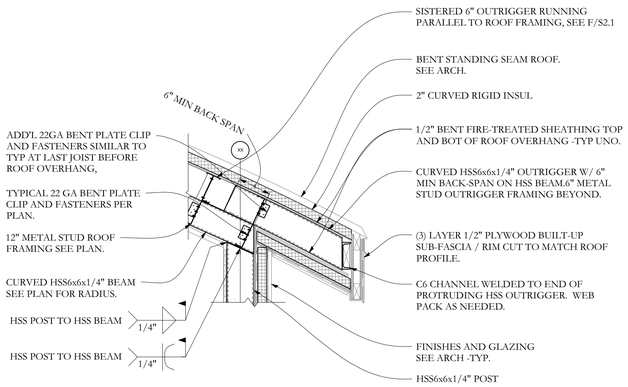

SECTION G/S-2.1 3/4"=1'-0

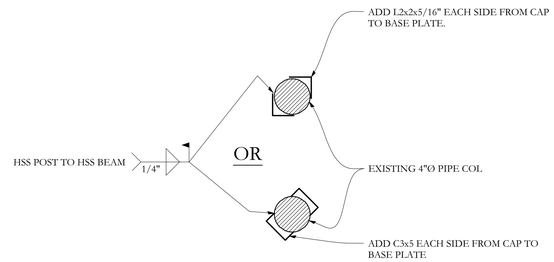

DETAIL H/S-2.1 1 1/2"=1'-0

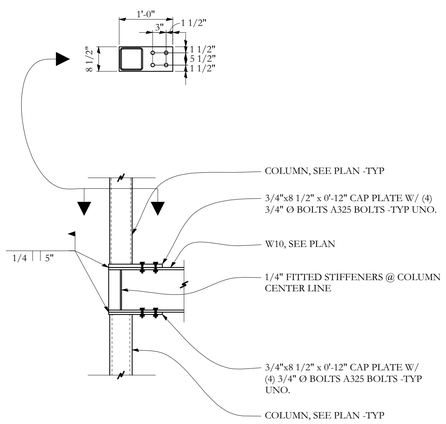

SECTION D/S-2.1 3/4" = 1'-0"

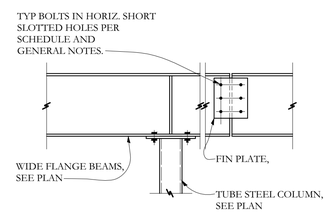

TYPICAL BEAM WEB SPLICE CONNECTION

SECTION E/S-2.1 3/4"=1'-0

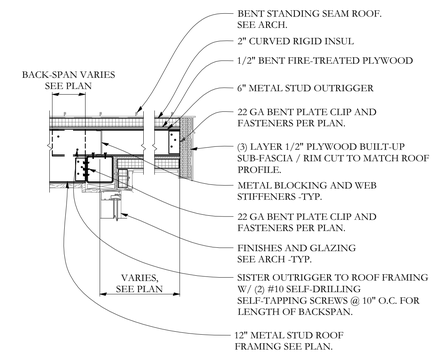

SECTION F/S-2.1 3/4"=1'-0

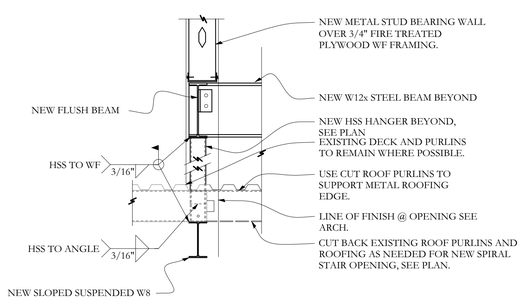

SECTION A/S2.1 3/4"=1'-0

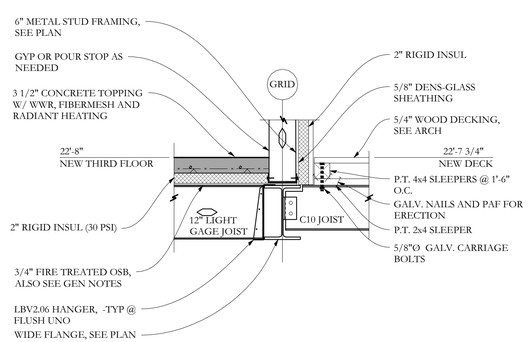

SECTION B/S2.1 3/4"=1'-0

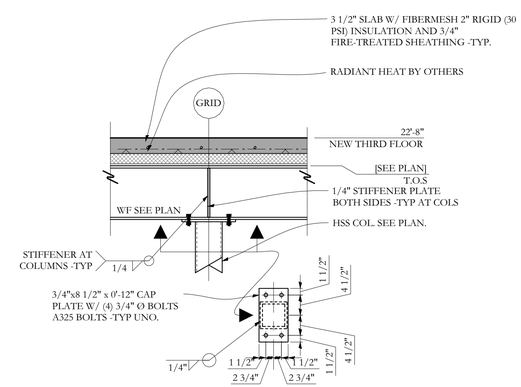

SECTION C/S2.1 3/4"=1'-0

STATE OF MAINE
AARON C. JONES
No. 10968
LICENSED
PROFESSIONAL ENGINEER
Date: 05/28/14
6/5/13

Prepared For:

Consultant:
Structural Integrity
Consulting Engineers
77 Oak Street
Portland, ME, 04101
p. 207-774-4614
f. 866-793-7835
www.structuralintegrity.com
BUILD WITH CONFIDENCE
© 2011 Aaron C. Jones, PE
SI# 13-0052

Architect:
ARCHETYPE architects
48 Union Wharf Portland, Maine 04101
(207) 772-6022 Fax (207) 772-4056

Project:
MAINE WHARF
OFFICE RENOVATION
BUILDING B
68 COMMERCIAL ST.
PORTLAND, MAINE

Revisions:

Scale: 1/4" = 1'-0"

Date: 06-05-13

SECTIONS

S2.1