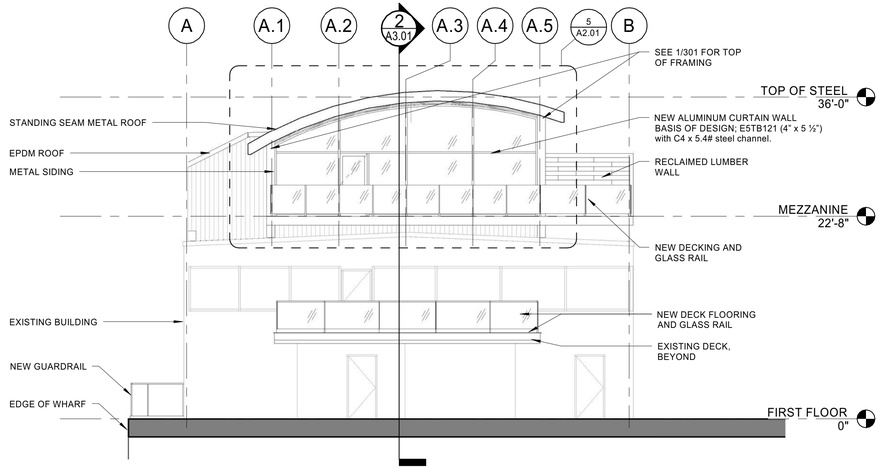

1 | EAST ELEVATION
1/8" = 1'-0"

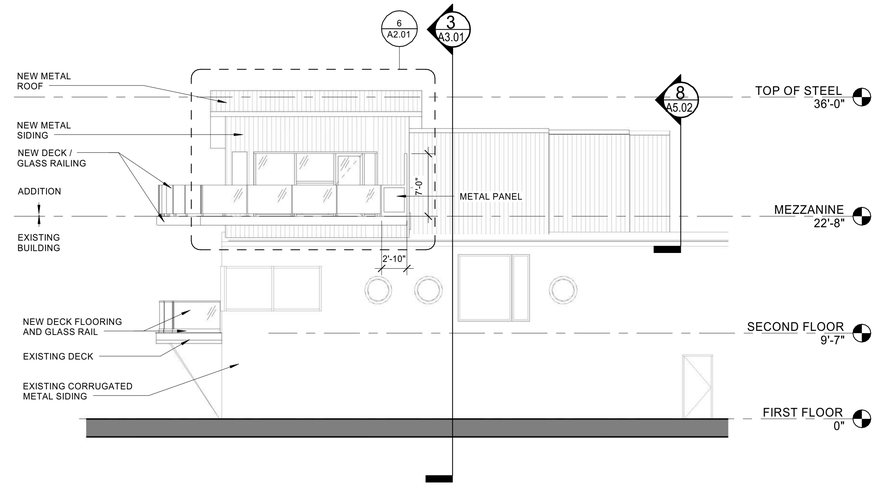

2 | NORTH ELEVATION
1/8" = 1'-0"

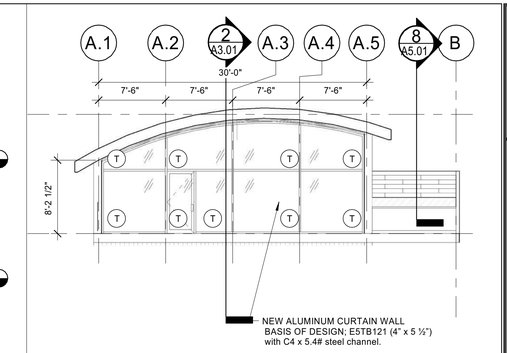

5 | EAST ELEVATION - STOREFRONT
1/8" = 1'-0"

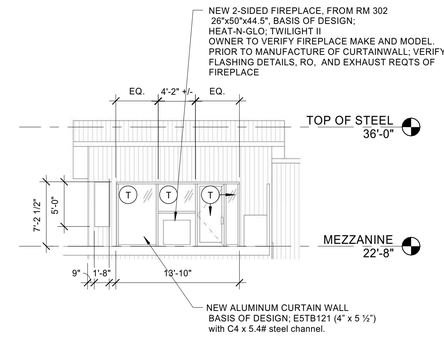

6 | NORTH ELEVATION - STOREFRONT
1/8" = 1'-0"

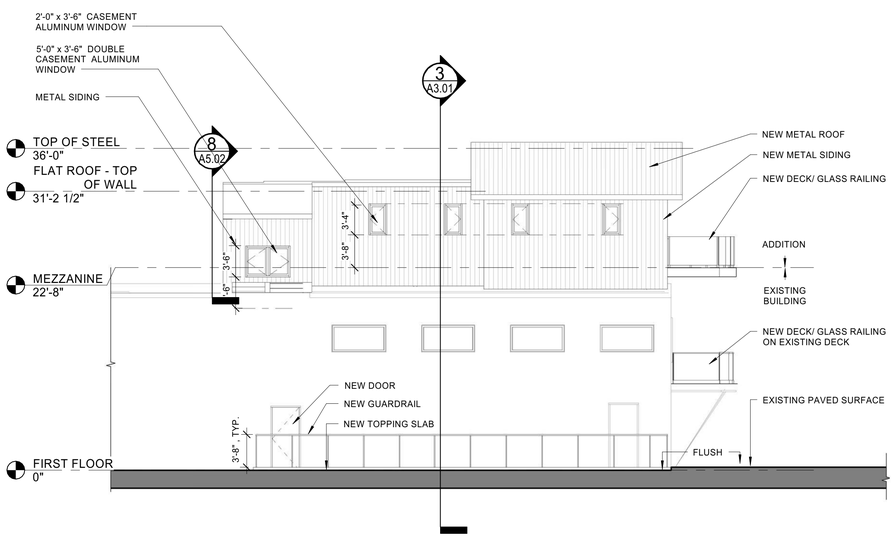

3 | SOUTH ELEVATION
1/8" = 1'-0"

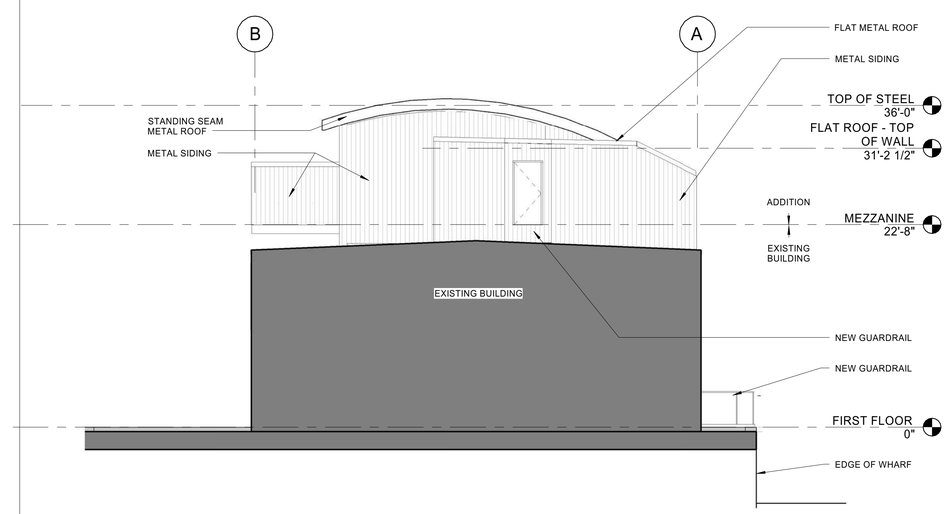

4 | WEST ELEVATION
1/8" = 1'-0"

Reviewed for Code Compliance
Inspections Division
Portland, Maine
Date: 05/28/14

Prepared For:
MAINE WHARF LLC
72 COMMERCIAL STREET
PORTLAND, ME

Consultant:

Architect:
ARCHETYPE architects
48 Union Wharf Portland, Maine 04101
(207) 772-6022 Fax (207) 772-4056

Project:
MAINE WHARF OFFICE RENOVATION BUILDING B
68 COMMERCIAL STREET, PORTLAND ME

Revisions:

Scale: 1/8" = 1'-0"

Date: 21 JUNE 2013

ELEVATIONS

A2.01