Reviewed for Code Compliance
Inspections Division
Approved with Conditions
Date: 12/04/13

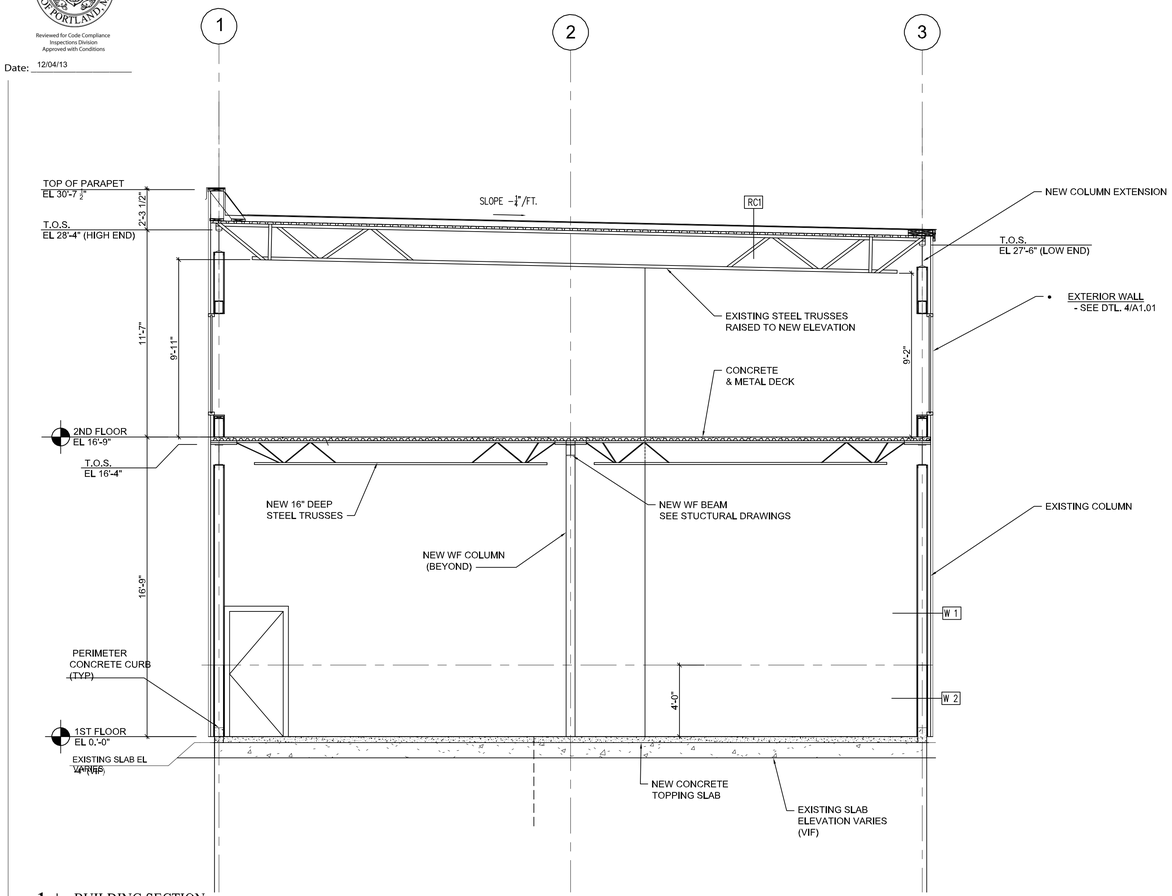

1 | BUILDING SECTION
1/4" = 1'-0"

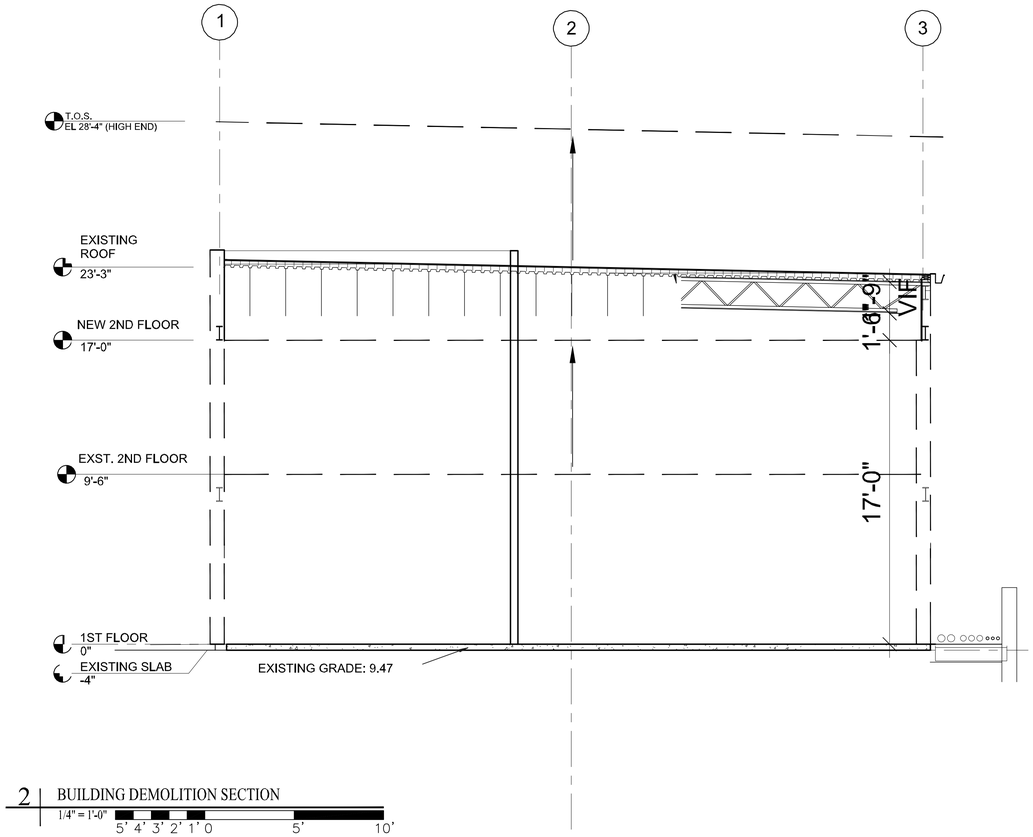

2 | BUILDING DEMOLITION SECTION
1/4" = 1'-0"

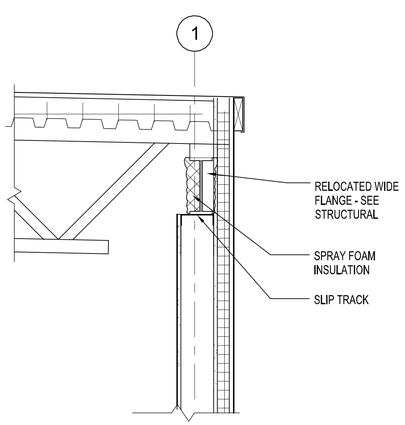

3 | ROOF DETAIL
1" = 1'-0"

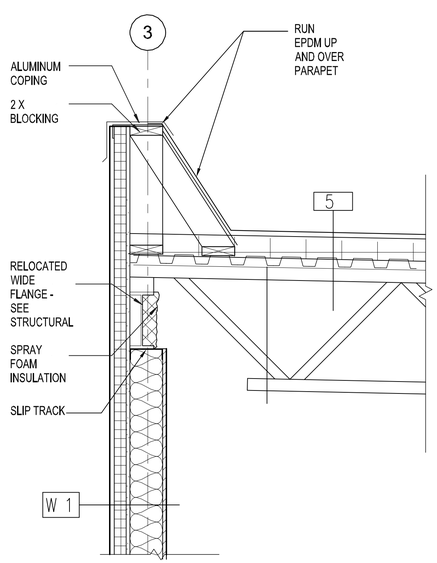

4 | PARAPET DETAIL
1" = 1'-0"

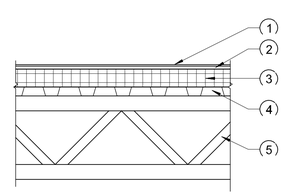

RC1 Roof Assembly

1. EPDM
2. Densdeck
3. 3" Poly-iso rigid insulation
4. Relocated existing decking or new metal decking - see structural
5. Relocated and sloped roof joists

6 | ROOF ASSEMBLY
1" = 1'-0"

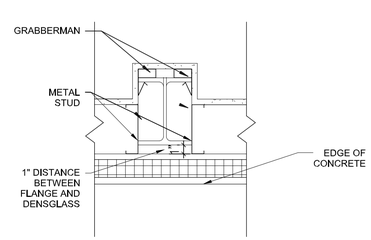

5 | TYPICAL COLUMN DETAIL
1 1/2" = 1'0"

REGISTERED ARCHITECT
WILLIAM KENNETH HOPKINS
NO. 1090
STATE OF MAINE

Prepared For:
MAINE WHARF LLC
72 COMMERCIAL STREET
PORTLAND, ME 04101

Consulting Engineer:

Architect:
ARCHETYPE architects
48 Union Wharf Portland, Maine 04101
(207) 772-6022 Fax (207) 772-4056

Project:
MAINE WHARF
68 COMMERCIAL STREET
PORTLAND, MAINE

Revisions:
06 FEB 2013 : ISSUED FOR PERMIT
22 NOV 2013 : PHASE 1 : ISSUED
FOR PERMIT AND CONSTRUCTION

Scale:
AS INDICATED

Date:
27 Feb. 2013

PHASE 1 SECTION
AND DETAILS

A3.01