DOOR/HARDWARE NOTES

1. THERE IS TO BE 6" BETWEEN HINGE SIDE OF DOOR & ADJACENT WALL UNLESS NOTED OTHERWISE.
2. ALL DOORS TO BE 3'-0"W x 6'-8"H, INCL. PAIR OF DOUBLE DOORS, SOLID CORE PAINTED TO MATCH SAMPLE PROVIDED BY MEYER DESIGN. w/ HOLLOW METAL DOOR FRAMES, UNLESS NOTED OTHERWISE. SUBMIT SAMPLE TO MEYER DESIGN FOR APPROVAL PRIOR TO USE.
3. ALL HOLLOW METAL DOOR FRAMES SHALL BE KNOCK-DOWN CONSTRUCTION.
4. INCREASE FRAME AND HINGE SPECIFICATION TO SUPPORT ALL DOORS 3'-6" AND ABOVE IN WIDTH.
5. SWING DOORS SHALL BE 1-3/4" THICK SOLID CORE WOOD, EXCEPT CLOSET DOORS WHICH SHOULD BE 1-3/4" HOLLOW CORE WOOD. BI-FOLD DOORS SHALL BE 1-3/8" THICK HOLLOW CORE WOOD. MATCH OR RE-USE BUILDING STANDARD WHERE APPLICABLE.
6. ALL DOORS TO BE CENTERED IN CLOSETS & STORAGE ROOMS UNLESS NOTED OTHERWISE.
7. CONTRACTOR SHALL ENSURE, UNLESS SPECIFICALLY NOTED OTHERWISE, THAT ALL DOORS OPENING OVER CARPET SHALL SWING CLEARLY OVER CARPET.
8. PROVIDE COAT HOOKS ON ALL OFFICE DOORS, UNLESS NOTED OTHERWISE. COAT HOOKS TO BE ROCKWOOD, MODEL # 806, 1 1/16"W X 1 1/4"H, FINISH: CHROME. INSTALL 66" AFF. SEE DOOR HARDWARE SCHEDULE FOR SPECIFIC ROOM NUMBER LOCATIONS.
9. CONTRACTOR SHALL BE RESPONSIBLE FOR ORDERING AND INSTALLING APPROPRIATE HARDWARE.
10. ALL NEW HARDWARE FINISH TO MATCH EXISTING. LEVER DESIGN TO MATCH EXIST.
11. ALL HINGES TO BE 5 KNUCKLE BUTT-HINGE (TYP.) UNLESS NOTED OTHERWISE.
12. CONTRACTOR TO PROVIDE WALL OR FLOOR STOPS AS REQUIRED IN ROOMS INDICATING DOOR STOPS. CONTRACTOR IS TO FIELD INVENTORY CONDITIONS TO DETERMINE ACTUAL COUNT AND TYPE REQUIRED.
13. CONTRACTOR TO REFER TO TENANT SPECIFIED MFR. OPTIONS AND SELECT BEST OPTION AND HARDWARE STYLE BASED UPON PRICING AND AVAILABILITY.

    ACCEPTABLE PRODUCTS:

    DOOR BUTTS: HAGER, LAWRENCE OR MCKINNEY
    LEVER-OPERATED LOCKSETS: SCHLAGE OR YALE
    LEVER-OPERATED LATCHSETS: SCHLAGE OR YALE
    DOOR CLOSERS: CORBIN-RUSSWIN, HAGER, LCN, RIXSON OR YALE
    PANIC DEVICES: ADAMS RITE, CORBIN-RUSSWIN, HAGER, VON DUPRIN OR YALE
    DOOR STOPS: IVES, MCKINNEY, RIXSON OR EQUAL
    FLUSH BOLTS: IVES, MCKINNEY OR EQUAL
    KICK PLATES: IVES, MCKINNEY OR EQUAL
    HINGES: HAGER, IVES, MCKINNEY OR EQUAL
    SILENCERS: IVES, MCKINNEY OR EQUAL
    ROLLER CATCH: GLYNN JOHNSON OR IVES
    PIVOTS: IVES, MCKINNEY OR RIXSON
14. ALL INTERIOR DOOR KEYING ASSIGNMENTS ARE TO BE COORDINATED WITH TENANT & BUILDING OWNER. ALL LOCKSETS SHALL BE KEYED TO THE BUILDING'S MASTER KEY SYSTEMS AND THE CONTRACTOR SHALL SCHEDULE A FINAL MEETING WITH THE OWNER TO TURN OVER THE KEYS AFTER ALL CONSTRUCTION LOCKSETS HAVE BEEN REMOVED.
15. COORDINATE WITH TENANT'S SECURITY VENDOR TO PROVIDE APPROPRIATE HARDWARE FOR ALL SECURITY DOORS. CONTRACTOR TO PROVIDE ALL NECESSARY CONDUIT/WIRE CHASE TO ALLOW FOR ELECTRICAL CONNECTION AT THESE LOCATIONS. MAGNETIC LOCK @ ALL CARD READERS BY SECURITY. DOOR PREP BY G.C. NO ELECTRICAL HINGES. G.C. IS TO MORTISE OUT AREA IN DOOR FOR PLATE.
16. GC TO PROVIDE HOLLOW METAL DOOR FRAMES AS REQ'D. TO ACCOMMODATE INCREASED WALL THICKNESS AS APPROPRIATE, UNLESS NOTED OTHERWISE.
17. ALL FIRE-RATED DOORS SHALL BE APPROPRIATELY LABELED AND HAVE THE PROPER CODE-COMPLIANT HARDWARE.
18. ALL VIEW PANELS TO BE CLEAR TEMPERED GLASS IN MTL. OR WOOD FRAME TO MATCH DOOR TYPE. RECTANGULAR VIEW PANELS TO BE 5" X 20", TYP., PROVIDE RATED WIRE GLASS @ ALL RATED DOORS.
19. NON-CODE GLASS SHALL BE CLEAR FLOAT GLASS, THICKNESS AS APPROPRIATE PER INSTALLATION.
20. COMPLY WITH MANUFACTURER'S STANDARDS FOR RAIL AND STILE MEMBER THICKNESS. PROVIDE HEAVY-DUTY HARDWARE UNITS INDICATED IN SIZES, NUMBER, AND TYPE RECOMMENDED BY MANUFACTURER. FINISH EXPOSED PARTS TO MATCH DOOR FINISH, UNLESS OTHERWISE INDICATED.

GENERAL CONSTRUCTION NOTES

1. REFER TO COVER SHEET FOR ADDITIONAL GENERAL NOTES AND REQUIREMENTS.
2. CONTRACTOR SHALL BE RESPONSIBLE FOR ADHERING TO ALL FEDERAL, STATE, AND LOCAL CODES, AS WELL AS SECURING ALL NECESSARY BUILDING PERMITS. CONTRACTOR IS TO BE RESPONSIBLE FOR PLACING AND INSURING ALL LIFE SAFETY DEVICES MEET ALL APPLICABLE CODES AND ARE IN PROPER WORKING ORDER. DEVICES SHALL INCLUDE BUT NOT BE LIMITED TO: FIRE BELL, PULL STATIONS, SMOKE DETECTION AND EXTINGUISHERS.
3. REFER TO REFLECTED CEILING PLAN 2/A2.01 FOR ALL EMERGENCY LIGHTING AND EXIT SIGN LOCATIONS.
4. REFER TO ELECTRICAL PLAN 1/A2.01 FOR ALL ELECTRICAL EQUIPMENT LOCATIONS.
5. CONTRACTOR IS TO PROVIDE PLYWOOD BLOCKING AND/OR KITCHEN METAL IN WALL BEYOND MILLWORK/CABINETRY/SHELVING FOR MOST SECURE METHOD OF ANCHORING AS WELL AS WALL MOUNTED FURNITURE WITHIN OFFICES. SEE PLAN AS REQUIRED FOR LOCATIONS.
6. GC TO INSTALL CONTROL JOINTS IN THE FACE OF GWB PARTITIONS AND CEILINGS WHEN THE SIZE OF THE SURFACE EXCEEDS THE FOLLOWING:

    PARTITIONS: 30' MAX IN EITHER DIRECTION
    CEILINGS: 50' MAX WITH PERIMETER RELIEF, OR
    CEILINGS: 30' MAX IN EITHER DIRECTION WITHOUT PERIMETER RELIEF

    IF NOT NOTED ON PLAN, GC TO LOCATE CEILING JOINTS NEAR COLUMN PENETRATIONS TO REDUCE STRESSES IN THE CEILING MEMBRANE.
7. GC TO PROVIDE EXPANSION JOINTS IN FLOOR SLABS, ROOF PLANES, WALLS AND CEILINGS, AND/OR EXPANSION JOINT COVER PLATES IN FLOORS AS APPROPRIATE IN THE PROJECT SCOPE. UNLESS OTHERWISE NOTED, SELECTIONS TO BE MADE FROM MM SYSTEMS PRODUCT LINES; WWW.MMSYSTEMSCORP.COM. GC TO PROVIDE CUTS AS APPROPRIATE FOR MEYER APPROVAL PRIOR TO THE PURCHASE AND INSTALLATION. COVER PLATES FOR FLOORS TO BE COORDINATED WITH THE FINISH MATERIAL FOR ADEQUATE INSTALLATION TOLERANCES AND MOVEMENT CHARACTERISTICS.
8. EXISTING WINDOW BLINDS ARE TO BE REVIEWED FOR DAMAGE AND MISSING BLINDS. NO NEW BLINDS AT THIS POINT
9. CONTRACTOR IS TO REVIEW EXISTING FIRE HOSE LOCATIONS WHERE APPLICABLE, ALONG CORE AREA TO INSURE DEVICES ARE WORKING AND MEET CODE REQUIREMENTS.
10. DESIGN BUILD ALL M/E/P, SPRINKLER AND LIFESAFETY TO BE DESIGN BUILD. REFER TO DESIGN BUILD CONTRACTOR FOR MECHANICAL, ELECTRICAL, PLUMBING, SPRINKLER AND LIFE SAFETY INFORMATION.

THERMAL AND MOISTURE PROTECTION:

1. THE CONTRACTOR IS RESPONSIBLE FOR REPAIRING OR REPLACING ALL INSULATION DAMAGED AS A RESULT OF HIS WORK.
2. THE CONTRACTOR SHALL PROVIDE VINYL VAPOR BARRIER AND SEALANTS AT ALL WALLS SCHEDULED TO RECEIVE SUCH. ALL MATERIALS AND METHODS OF INSTALLATION SHALL BE IN ACCORDANCE WITH INDUSTRY STANDARDS. ANY WALL ABUTTING A ROOM TO RECEIVE A SUPPLEMENTAL HVAC SYSTEM IS TO RECEIVE A VAPOR BARRIER ON THE WARMER SIDE OF THE WALL.

SPECIALTIES AND FURNISHINGS:

1. FIRE EXTINGUISHER CABINETS SHALL BE BUILDING STANDARD, TENTATIVELY LOCATED BY THE CONTRACTOR IN CONFORMANCE WITH CODE REQUIREMENTS. BEFORE FINAL LOCATION, MEYER DESIGN SHALL RECEIVE AND APPROVE LOCATION DRAWINGS. FINAL LOCATION MUST BE APPROVED BY MEYER DESIGN AND THE CONTRACTOR'S ENGINEERS RESPONSIBLE FOR ALL LIFE SAFETY WORK.

MECHANICAL AND PLUMBING:

1. THE CONTRACTOR IS RESPONSIBLE FOR PROVIDING AND COORDINATING THE CERTIFIED PROFESSIONAL ENGINEERING SERVICES FOR THE HVAC, PLUMBING, ELECTRICAL, AND LIFE SAFETY SYSTEMS. THE CONTRACTOR SHALL PROVIDE OPERATING MANUALS AND "AS BUILT" DRAWINGS.
2. ALL REFERENCES TO MECHANICAL, ELECTRICAL, PLUMBING, AND LIFE SAFETY ENGINEERING WITHIN THESE CONSTRUCTION DOCUMENTS ARE FOR DESIGN INTENT ONLY. THE CONTRACTOR SHALL COMPLY WITH ALL DIMENSIONS DETERMINED BY MEYER DESIGN AND INDICATED ON THESE DRAWINGS WITH RESPECT TO ENGINEERING AND SHALL CONTACT MEYER DESIGN IF ANY DIMENSIONAL DISCREPANCIES OCCUR PRIOR TO PROCEEDING WITH THE WORK.
3. ALL ELECTRICAL, MECHANICAL, AND PLUMBING WORK SHALL BE COORDINATED BY THE CONTRACTOR WITH ANY MILLWORK ITEMS.
4. THE CONTRACTOR SHALL BE RESPONSIBLE FOR THE COMPLETENESS AND SUITABILITY OF ANY PLUMBING, ELECTRICAL OR MECHANICAL, ARCHITECTURAL, MILLWORK OR HARDWARE ITEM, FIXTURE OR APPLIANCE SHOWN ON THE DRAWINGS AND FURNISHED UNDER THIS CONTRACT. A CUT OR SHOP DRAWING (AND SAMPLE, IF SPECIFIED) OF EACH SUCH ITEM, ACCOMPANIED BY A LETTER CERTIFYING THAT THE ITEM IS SUITABLE FOR AND WORKABLE ON THIS PROJECT, SHALL BE SUBMITTED TO MEYER DESIGN.
5. THE CONTRACTOR IS RESPONSIBLE FOR THE PROPER INTERFACE OF PLUMBING FIXTURES WITH ADJACENT BUILDING COMPONENTS AND/OR EXISTING SYSTEMS AND SHALL NOTIFY MEYER DESIGN IMMEDIATELY OF ANY POTENTIAL INSTALLATION OR INTERFACE PROBLEM SO THAT ALTERNATE SELECTION OR NEW DESIGN CAN BE MADE.
6. PROVIDE PROPER PIPING FOR HOT AND COLD WATER, DRAIN LINES, VENTS, STACKS AND SHUT-OFF VALVES AS REQUIRED.

PROJECT SPECIFIC FINISH NOTES

1. EXISTING FINISHES TO REMAIN.
2. NEW PARTITIONS TO BE PAINTED TO MATCH EXISTING.
3. PAINT/ PATCH/ REPAIR WALLS AS REQUIRED WHERE DAMAGED. @ LOCATIONS REQUIRING PAINT CONTRACTOR, TO PAINT ENTIRE WALL FROM CORNER TO CORNER.
4. WINDOW TINT FILM ON EXTERIOR WINDOWS TO REMAIN @ WINDOWS WHERE TINT FILM IS DAMAGED REMOVE TINT FILM & REPLACE W/ NEW TO MATCH EXISTING.
5. EXISTING BLINDS TO REMAIN.
6. GLASS WALL @ CONFERENCE ROOM # 203 TO BE BY KI DIRECTLY. CONTACT: LAUREN DOAN: 610.277.7100 x135, EMAIL: LAUREN.DOAN@KI.COM FOR COORDINATION.
7. AT SERVER ROOM # 216 PROVIDE NEW VCT, MANNINGTON , ESSENTIAL VCT, ALMOND BUFF # 167, 12" x 12" TILE.
8. AT SERVER ROOM # 216 PROVIDE NEW 4" VINYL WA;; BASE, MANNINGTON # 924 TOASTED SESAME.
9. AT WORK ROOM # 217, PROVIDE NEW WOOD WALL BASE @ NEW PARTITION TO MATCH EXISTING.
10. AT SERVER ROOM # 216. REMOVE CARPET & SALVAGE FOR POTENTIAL RE-USE AND/ OR ATTIC STOCK.
11. VERIFY ATTIC STOCK OF CARPET/ BASE/ PAINT ETC. PRIOR TO PURCHASING NEW.
12. NEW COUNTER & CABINETS @ WORK ROOM # 217 TO BE PLASTIC LAMINATE. MANUFACTURER/ COLOR: TBD.

DEMOLITION NOTES (GENERAL)

1. REFER TO COVER SHEET FOR GENERAL NOTES AND REQUIREMENTS.
2. DESIGN BUILD ALL MECHANICAL, ELECTRICAL AND PLUMBING DEMOLITION SHALL BE THE RESPONSIBILITY OF THE GENERAL CONTRACTOR AND SHALL COMPLY WITH ALL APPLICABLE CODES, ORDINANCES, RULES, REGULATIONS OF LOCAL CITY, TOWNSHIP, COUNTY, AND STATE REQUIREMENTS.
3. THE INTENT OF THE SELECTIVE DEMOLITION WORK IS TO REMOVE EXISTING FIT-OUT CONSTRUCTION ALLOWING ALL NEW CONSTRUCTION TO PROCEED. THE DEMOLITION DRAWINGS MAY NOT INDICATE ALL ITEMS TO BE REMOVED. THE DEMOLITION DRAWINGS ARE TO BE USED AS PART OF THE GENERAL CONTRACTOR'S ON SITE SURVEY TO DETERMINE THE COMPLETE SCOPE OF THE DEMOLITION WORK, AS INDICATED BY THE CONTRACT DOCUMENTS AND AS REQUIRED BY THE ON-SITE CONDITIONS.
4. ALL EXISTING CONDITIONS AND DIMENSIONS INDICATED ON THE DRAWINGS ARE TO BE VERIFIED IN THE FIELD PRIOR TO PROCEEDING WITH ANY WORK.
5. ALL SUBCONTRACTORS ARE RESPONSIBLE FOR THE COORDINATION OF THEIR PARTICUALR SCOPE OF WORK. THE GENERAL CONTRACTOR IS RESPONSIBLE FOR GENERAL COORDINATION ONLY. ALL SUBCONTRACTORS ARE TO SCHEDULE AND COORDINATE THEIR WORK WITH THE GENERAL CONTRACTOR.
6. ITEMS TO BE REMOVED AND DISCARDED SHALL BE DISPOSED OF IN A MANNER ACCEPTABLE TO BUILDING OWNER AND LOCAL AUTHORITIES. ITEMS TO BE RETAINED FOR POSSIBLE REUSE SHALL BE CLEARLY MARKED, CLEANED AND RECONDITIONED TO THEIR APPROPRIATE ORIGINAL STATE AND STORED IN A SECURE LOCATION. GENERAL CONTRACTOR TO COORDINATE WITH OWNER'S REPRESENTATIVE.
7. WHERE PARTITIONS OR OTHER WORK IS NOTED TO BE REMOVED, ADJACENT WALLS, CEILINGS, FLOORS AND FINISHES SHALL BE PATCHED AND LEVELED, AS REQUIRED, TO BLEND TOGETHER AND MATCH EXISTING. ALL SELECTIVE DEMOLITION WORK ADJACENT TO REMAINING CONSTRUCTION MUST BE DONE IN A WORKMANLIKE MANNER IN PREPARATION FOR NEW CONSTRUCTION WORK.
8. LEVEL AND PREPARE CONCRETE FLOOR SLABS AS REQUIRED TO RECEIVE SPECIFIED NEW FINISH. FILL AND FIRESTOP ALL OPENINGS IN FLOORS, CEILINGS AND OTHER RATED ASSEMBLIES TO MAINTAIN RATING INTEGRITY.
9. THE GENERAL CONTRACTOR SHALL IDENTIFY EQUIPMENT AND MATERIALS TO BE RELOCATED AND COORDINATE THEIR METHODS OF REMOVAL, SAFE STORAGE, INVENTORY, ETC., WITH BUILDING OWNER/OWNER'S REPRESENTATIVE PRIOR TO START OF DEMOLITION WORK.
10. PROVIDE A DUST PROOF BARRIER AROUND AREAS OF CONSTRUCTION FOR DURATION OF WORK. FOREIGN OBJECTS AND ODORS ARE TO BE PREVENTED FROM ENTERING THE BUILDING VENTILATION SYSTEM.
11. PROVIDE AND MAINTAIN WEATHER PROTECTION AT EXTERIOR OPENINGS AS REQUIRED TO FULLY PROTECT THE INTERIOR PREMISES AGAINST DAMAGE FROM THE ELEMENTS UNTIL SUCH OPENINGS ARE CLOSED BY NEW CONSTRUCTION.
12. DO NOT CUT OR REMOVE CONSTRUCTION WHICH MIGHT WEAKEN OR IMPAIR THE STRUCTURAL INTEGRITY OR STRENGTH OF THE STRUCTURAL FRAMING OR SUPPORT SYSTEMS WHICH ARE TO REMAIN.
13. DESIGN, PROVIDE, ERECT AND MAINTAIN NECESSARY TEMPORARY SHORING, BRACING, FRAMING, OR SUPPORT WHERE LOAD BEARING STRUCTURAL OR SUPPORTING MEMBERS ARE WEAKENED BY CUTS OR OPENINGS OR SUBJECT TO DAMAGE FROM DEMOLITION OPERATIONS AND OTHERWISE AS REQUIRED FOR SAFETY OR TO PROTECT FINISH SURFACES FROM DAMAGE.
14. ALL BUILDING SYSTEMS MUST BE PROPERLY TERMINATED, REMOVED AND/OR CAPPED BY DEAD ENDING PIPING AND WIRING IN A SAFE, CODE-CONFORMING AND PERMANENT MANNER. WHERE PARTITIONS OR OTHER WORK IS NOTED TO BE REMOVED, REMOVE AND/OR TERMINATE ALL ELECTRICAL AND TELEPHONE OUTLETS, CONDUITS AND BOXES, LIGHT SWITCHES, THERMOSTATS, PLUMBING, DUCTWORK, MILLWORK AND ANY OTHER ATTACHED ITEMS.
15. ALL LIFE SAFETY SYSTEMS SHALL REMAIN ACTIVE DURING DEMOLITION. THE SPACE SHALL BE MAINTAINED AND LEFT IN A SAFE CONDITION. ALL FLOOR OPENINGS, HAZARDS, AND UNSAFE CONDITIONS SHALL BE IDENTIFIED AND THE GENERAL CONTRACTOR SHALL PROVIDE PROPER NOTIFICATION AND OBSTACLES TO SECURE PUBLIC SAFETY.
16. REMOVE AND RETURN TO BUILDING OWNER ALL SIGNAGE IN PROJECT AREAS ONLY. PROTECT ALL OTHER SIGNAGE ON FLOOR AS REQUIRED.
17. REMOVE AND SALVAGE ALL 36"W WOOD DOORS OF GOOD QUALITY FOR LATER REUSE, UNLESS NOTED OTHERWISE. GENERAL CONTRACTOR TO COORDINATE EFFORTS WITH OWNER'S REPRESENTATIVE.
18. REMOVE AND SALVAGE ALL INTERIOR GLASS AND FRAMING/HARDWARE OF GOOD QUALITY FOR LATER REUSE, UNLESS NOTED OTHERWISE. GC TO COORDINATE W/ OWNER'S REP.
19. EXISTING WINDOW TREATMENTS TO REMAIN, UNLESS NOTED OTHERWISE. PROTECT OR REMOVE AND STORE DURING CONSTRUCTION. CLEAN PRIOR TO PROJECT COMPLETION OR REINSTALLATION.
20. WHENEVER POSSIBLE, GENERAL CONTRACTOR TO DIVERT CONSTRUCTION, DEMOLITION AND LAND-CLEARING DEBRIS FROM DISPOSAL IN LANDFILLS AND INCINERATORS. REDIRECT RECYCLABLE RECOVERED RESOURCES BACK TO THE MANUFACTURING PROCESS. REDIRECT REUSABLE MATERIALS TO APPROPRIATE SITES.
21. ALL SUSPENDED CEILING GRID IS TO REMAIN FROM THE PROJECT AREA. WHERE EXISTING CEILINGS REMAIN, SALVAGE COMPONENTS AS REQUIRED TO PATCH EXISTING GRID AS REQUIRED BY NEW WORK.
22. PROVIDE ADEQUATE TEMPORARY FIRE PROTECTION IN ACCORDANCE WITH LOCAL FIRE DEPARTMENT REQUIREMENTS FOR THE DURATION OF THE PROJECT.
23. THE BUILDING AND SITE SHALL BE LEFT BROOM CLEAN & DRY AT THE END OF EACH DAY AND AT THE COMPLETION OF ALL DEMOLITION WORK.
24. RESTORE ANY SURFACES OF FINISHES WHICH ARE SCRATCHED, MARRED OR OTHERWISE DAMAGED BY THE INSTALLATION, MOVEMENT OR REMOVAL OF ALL EQUIPMENT ASSOCIATED WITH DEMOLITION PROCEDURES (E.G. SCAFFOLDING, CONTAINERS, ETC.)
25. DURING ANY REQUIRED DEMOLITION OF DESIGNATED AREAS, CONTRACTOR SHALL PROVIDE ADEQUATE TEMPORARY PROTECTION AND SHALL SECURE ADJACENT AREAS FROM DUST AND DEBRIS.
26. THE CONTRACTOR SHALL CONSTRUCT DEMISING PARTITIONS AS INDICATED ON THE DRAWINGS TO ACCOMMODATE THE PHASED CONSTRUCTION. THESE TEMPORARY PARTITIONS SHALL BE CONSTRUCTED IN A WORKMANLIKE MANNER AND SHALL COMPLY WITH ALL APPLICABLE INDUSTRY STANDARDS, BUILDING AND LIFE SAFETY CODES. PARTIAL DEMOLITION IN SUBSEQUENT PHASES SHALL BE IN ACCORDANCE WITH THIS SPECIFICATION.

PROJECT SPECIFIC CONSTRUCTION NOTES

1. ALL EXISTING CONSTRUCTION TO REMAIN UNLESS OTHERWISE INDICATED.
2. ALL EXISTING DOORS & HARDWARE TO REMAIN UNLESS OTHERWISE NOTED.
3. INFILL W/ NEW PARTITIONS TO MATCH EXISTING @ LOCATIONS WHERE INDICATED ON PLAN.
4. AT SERVER ROOM # 216, PROVIDE 4'-0"H x LENGTH OF WALL FIRE TREATED PLYWOOD.
5. NEW CASED OPENINGS @ OPEN AREA # 218 TO HAVE SIMILAR CONSTRUCTION TO DOORS.
6. NEW PARTITION SEPARATING WORK ROOM # 217 & SERVER # 216 TO BE FULL HEIGHT PARTITION W/ INSULATION.

PROJECT SPECIFIC DOOR NOTES

1. ALL DOORS TO BE PAINTED W/ FRESH COAT OF PAINT.
2. EXISTING STAIR DOORS # 200B & 200C EXISTING TO REMAIN, MODIFY DOOR & HARDWARE AS REQUIRED FOR USE W/ NEW CARD READER.
3. OFFICE DOOR # 210B IS EXISTING TO REMAIN. PROVIDE NEW LEVER & DOOR STOP AS REQUIRED FOR "LIKE NEW" CONDITION.
4. AT OFFICE # 207, REMOVE EXISTING DOOR PANEL. EXISTING FRAME TO REMAIN.
5. RELOCATE EXISTING SOLID DOOR PANEL & HARDWARE SALVAGE FROM OFFICE # 204
6. AT OFFICE # 204, RE-USE EXISTING 3'-0" WOOD DOOR, FRAME, & HARDWARE SALVAGED FROM DEMOLITION PROVIDE LEVER LOCKSET.
7. AT ALL NEW DOORS , PROVIDE DOOR HANDLES, HINGES, SILENCERS, DOOR STOPS, ETC. TO MATCH EXIST.
8. REMOVE 2) DOORS & FRAMES ENTERING OPEN AREA #218 AND SALVAGE FOR RE-USE.
9. DOOR # 203 IN CONFERENCE ROOM TO BE PART OF OFFICE FRONT SYSTEM BY OTHERS.
10. AT SERVER ROOM # 216, PROVIDE NEW 3'-0"W x 6'-8"H DOOR. PROVIDE HOLLOW METAL FRAME. PREP FRAME TO RECEIVE CARD READER.
11. AT OFFICE DOOR # 201B, REMOVE DOOR PANEL & PROVIDE NEW SOLID WOOD DOOR W/ FULL GLASS LITE. RE-USE EXISTING HARDWARE IF IN GOOD WORKING ORDER.
12. AT COATS # 200A, PROVIDE NEW 3'-0" W x 6'-8"H SOLID PANEL DOOR W/ PASSAGE LEVER HANDLE.
13. PROVIDE COAT HOOKS ON DOORS @ OFFICE (# 201, 202, 204-207, 209, & 210)

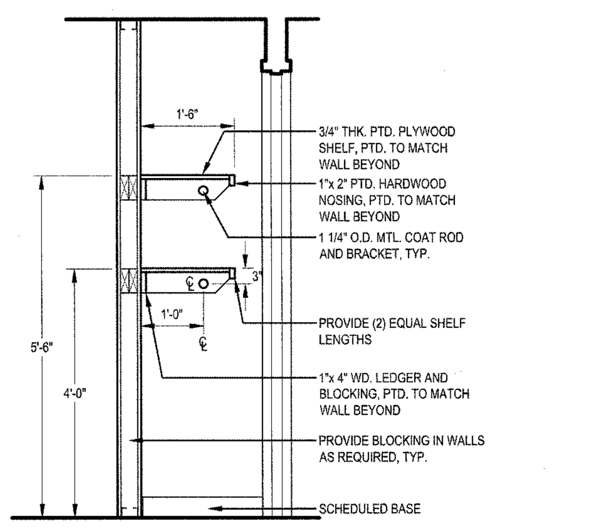

NOTE:
WHERE SHELF/ROD SPAN EXCEEDS 5'-0", PROVIDE CENTER SUPPORT BRACKET OR USE HEAVY DUTY ROD.

4 / A1.01 **ADA COAT CLOSET**
1/2" = 1'-0"

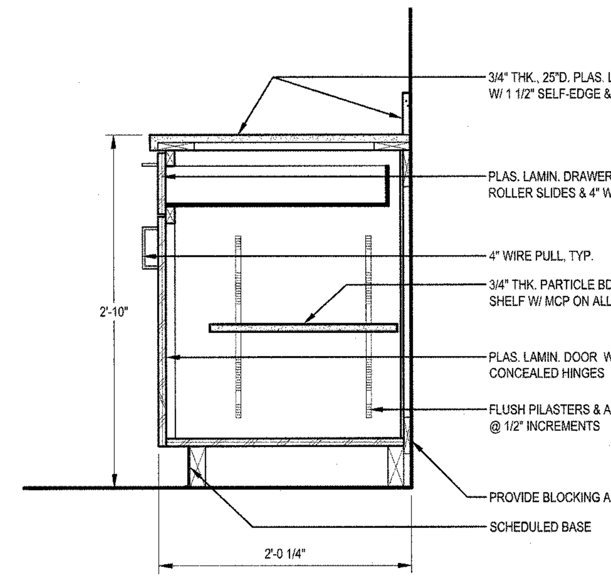

4 / A1.01 **SECTION @ WORK AREA CABINET**
1" = 1'-0"

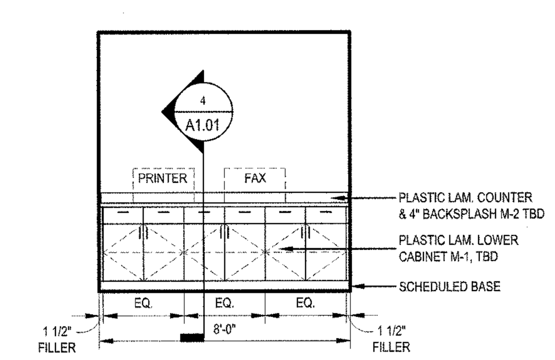

3 / A1.01 **ELEVATION @ WORK AREA**
1/4" = 1'-0"

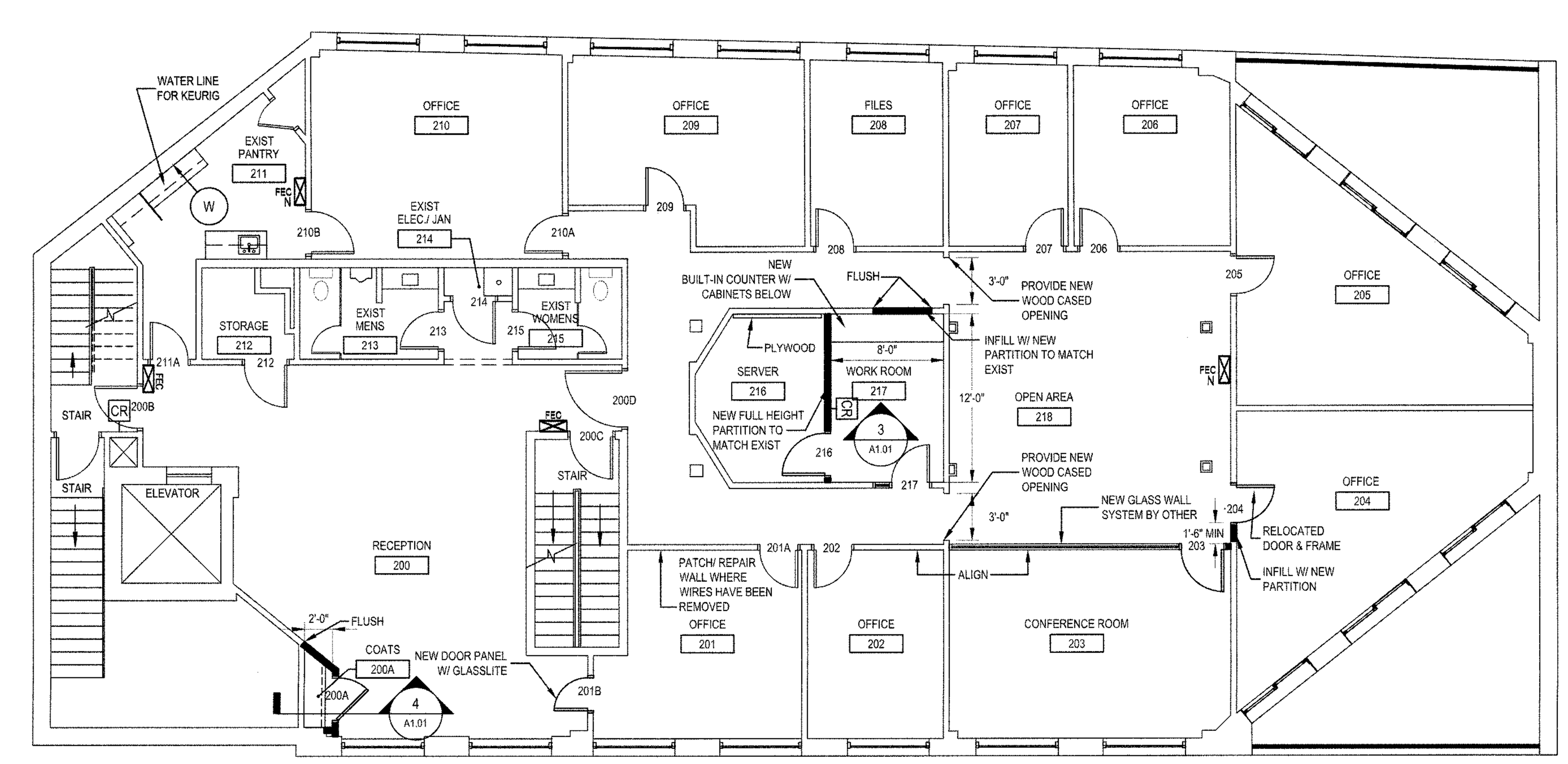

2 / A1.01 **CONSTRUCTION PLAN**
1/8" = 1'-0"

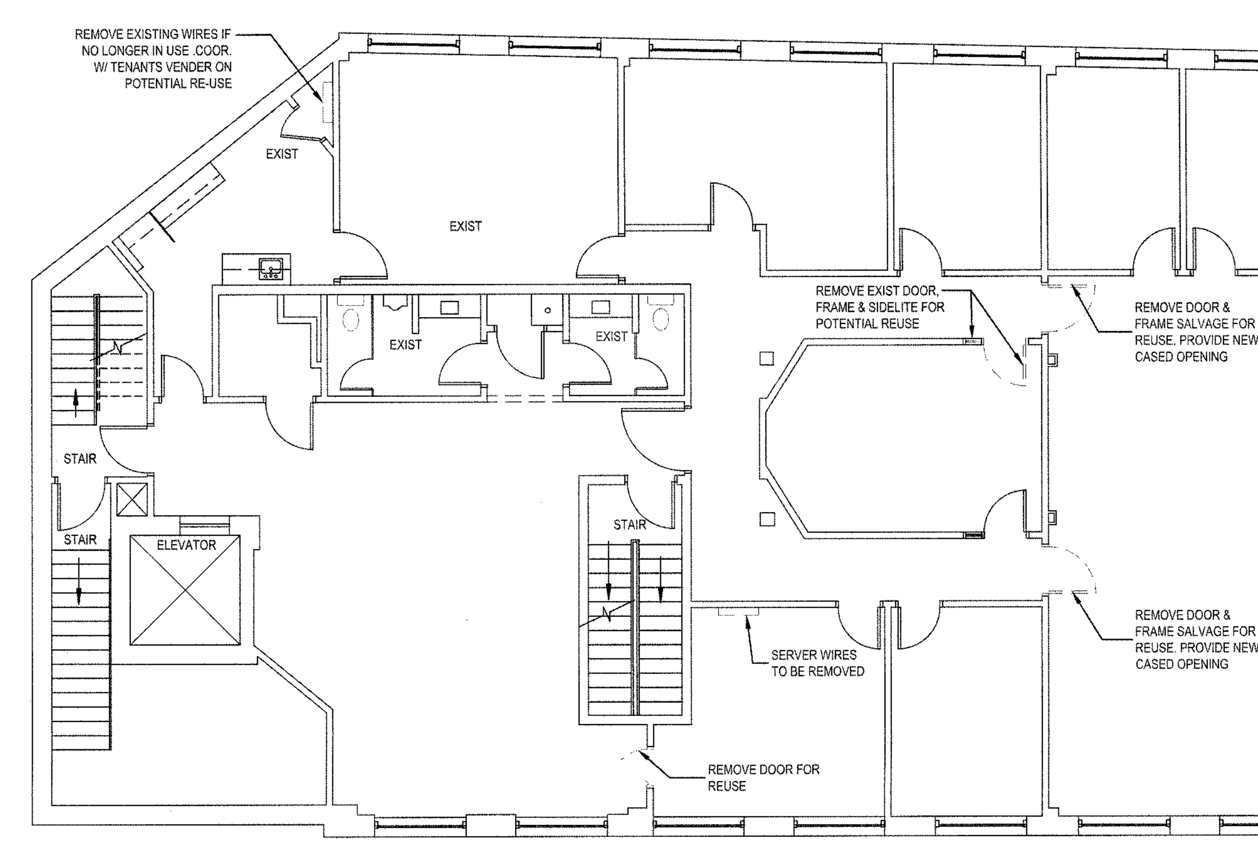

1 / A1.01 **DEMOLITION PLAN**
1/8" = 1'-0"

CONSTRUCTION LEGEND

(symbol)	EXISTING INTERIOR PARTITION TO REMAIN
(symbol)	DEMOLITION
(symbol)	NEW INTERIOR PARTITION; TO MATCH EXISTING. GC TO VERIFY CONSTRUCTION OF 3 5/8" METAL STUD
200	ROOM NUMBER
200	DOOR IDENTIFICATION SYMBOL: DOOR NUMBER
(symbol)	DETAIL NUMBER / DRAWING NUMBER
FEX	NEW FIRE EXTINGUISHER CABINET TO MATCH EXISTING
W	COLD WATER LINE LOCATION FOR COFFEE, REFRIGERATOR, ICE MAKER, OR OTHER APPLIANCES
CR	CARD READER AT ALL EXIT/ENTRY DOORS TIED TO SECURITY SYSTEM.
"X"	"N" INDICATES NEW TO MATCH EXISTING

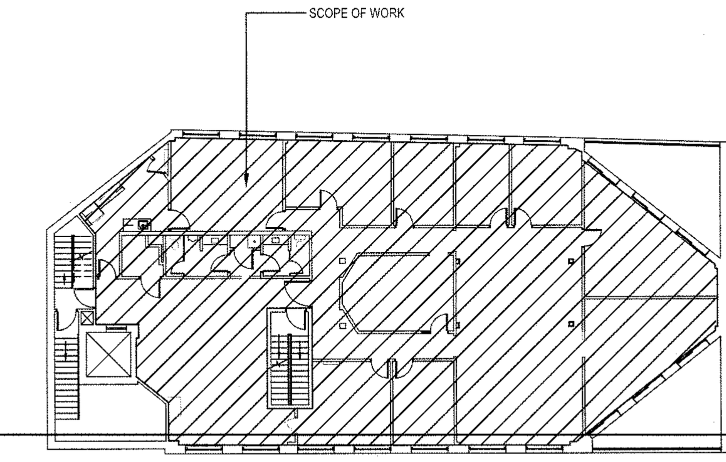

KEY PLAN
N.T.S.

NOTE: THIS DRAWING WAS BASED UPON PLANS RECEIVED BY OUR OFFICE FROM THE BUILDING OWNER AND HAVE NOT BEEN FIELD MEASURED BY MEYER DESIGN, INC. ACTUAL FIELD CONDITIONS MAY VARY.

MEYER
ARCHITECTURE + INTERIORS
MEYER DESIGN, INC. • MEYER ARCHITECTS, INC.
227 EAST LANCASTER AVENUE • ARDMORE, PA 19003-2304
VOICE • 610.649.8500 FAX • 610.649.8509
E-MAIL • info @ meyerdesigninc.com

©2015 MEYER DESIGN, INC. MEYER ARCHITECTS, INC. ALL RIGHTS RESERVED.

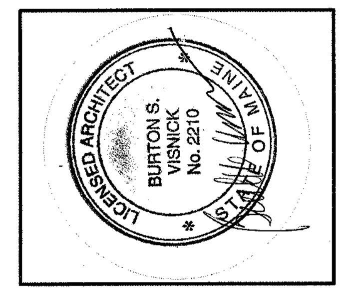

JANNEY MONTGOMERY SCOTT

50 PORTLAND PIER # 300
SECOND FLOOR
PORTLAND, ME, 04101
CUMBERLAND COUNTY

DEMOLITION PLAN & CONSTRUCTION

2ND FLOOR

DATE	OPERATION	BY	CHK	DATE	OPERATION	BY	CHK
03/20/15	ISSUE FOR PERMIT	TAR	KBF				

SCALE:	AS NOTED
JOB. NO.:	15016
PM:	KPB
PROJECT NORTH	DRAWING NO. A1.01