Reviewed for Code Compliance
Inspection Services Division
Approved with Conditions
Date: 10/05/15

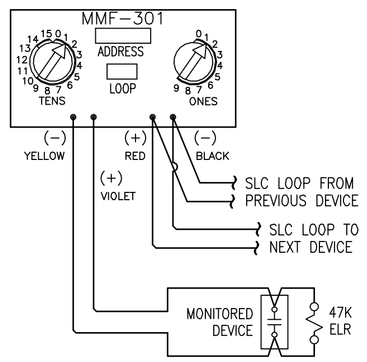

ADDRESSABLE MINI MONITOR WIRING DETAIL

SCHEMATIC: NO SCALE

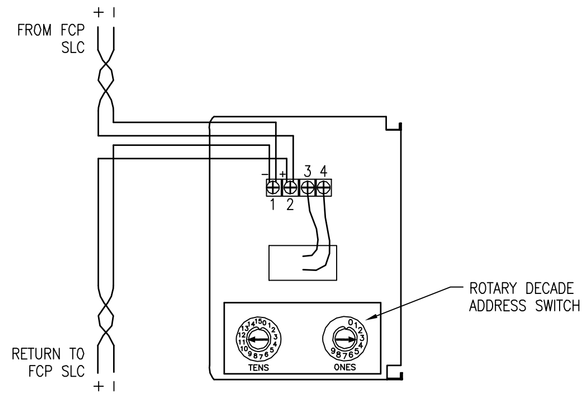

MANUAL PULL STATION WIRING DETAIL

SCHEMATIC: NO SCALE

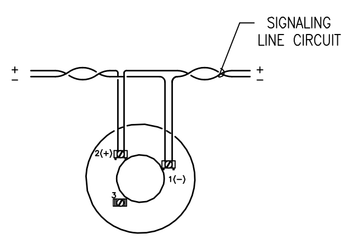

ADDRESSABLE SMOKE DETECTOR WIRING DETAIL

SCHEMATIC: NO SCALE

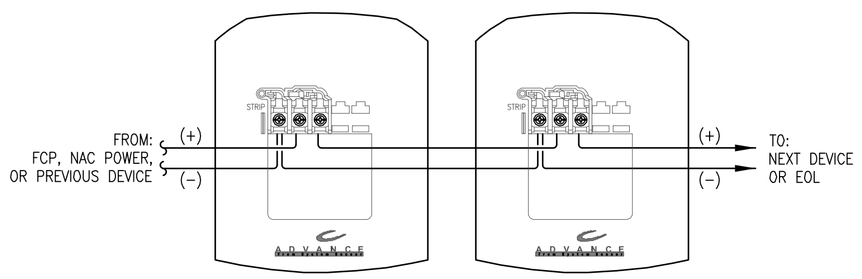

TYPICAL 2 WIRE STROBE WIRING DETAIL

SCHEMATIC: NO SCALE

GENERAL NOTES:

1. THESE DRAWINGS ARE DIAGRAMMATIC. REFER TO THE ARCHITECTURAL DRAWINGS FOR EXACT DIMENSIONS.
2. INSTALLATION SHALL COMPLY WITH NEC, NFPA 72 AND ALL OTHER APPLICABLE CODES AS REQUIRED BY THE LOCAL AUTHORITY HAVING JURISDICTION.
3. WIRING DEPICTED ON THESE PLANS IS SCHEMATIC – ACTUAL WIRE LOCATIONS MAY DIFFER FROM THESE PLANS. WIRING SHALL BE PERFORMED AS ACTUAL BUILDING CONSTRUCTION CONDITIONS ALLOW AND TO MINIMIZE PENETRATIONS THROUGH AREA SEPARATION WALLS AND FIRE WALLS. THE USE OF A RACEWAY IS PERMITTED AS LONG AS NO 110V OR HIGHER VOLTAGE CABLES ARE IN THE SAME RACEWAY.
4. FIRE RATINGS SHALL BE MAINTAINED FOR ALL PENETRATIONS THROUGH FIRE–RATED CONSTRUCTION.
5. POWER FOR ALL FIRE ALARM PANELS AND FIRE ALARM POWER SUPPLIES MUST BE PROVIDED BY A DEDICATED AC BRANCH CIRCUIT.
6. POWER–LIMITED AND NONPOWER–LIMITED CIRCUIT WIRING MUST REMAIN SEPARATED IN CABINET. ALL POWER–LIMITED CIRCUIT WIRING MUST REMAIN AT LEAST 0.25" AWAY FROM ANY NONPOWER–LIMITED CIRCUIT WIRING. FURTHERMORE, ALL POWER–LIMITED AND NONPOWER–LIMITED CIRCUIT WIRING MUST ENTER AND EXIT THE CABINET THROUGH DIFFERENT KNOCK OUTS AND/OR SEPARATE CONDUITS.
7. WHEN UTILIZING CLASS "A" CIRCUITS, SEPARATE OUTGOING AND RETURN CONDUCTORS OF CLASS "A" CIRCUITS BY A MINIMUM OF 12" WHERE RUN VERTICALLY AND 48" WHERE RUN HORIZONTALLY.
8. WHEN UTILIZING SHIELDED CABLE TIE SHIELDS THROUGH AND INSULATE AT EACH JUNCTION BOX. INSULATE AND TAPE BACK AT END.
9. ALL FIRE ALARM CABLING SHALL BE ACCEPTABLE TO THE FIRE ALARM EQUIPMENT MANUFACTURER FOR THE INTENDED PURPOSE.
10. SMOKE DETECTORS SHALL NOT BE INSTALLED UNTIL AFTER CONSTRUCTION CLEAN–UP IS COMPLETED AND FINAL.
11. LOCATE SMOKE DETECTORS A MINIMUM OF THREE (3) FEET FROM MECHANICAL DIFFUSERS. WALL–MOUNTED SMOKE DETECTORS SHALL BE LOCATED A MINIMUM OF 4" AND A MAXIMUM OF 12" FROM CEILING. CEILING–MOUNTED SMOKE DETECTORS SHALL BE MOUNTED ON CEILINGS AND NOT ON THE BOTTOMS OF BEAMS OR JOISTS.
12. PROVIDE SYNCHRONIZATION OF ALL VISUAL NOTIFICATION APPLIANCE CIRCUITS. PROVIDE ALL REQUIRED SYNC MODULES. PROVIDE A MULTI–SYNC MODE SLAVE CONNECTION BETWEEN ALL SYNC MODULES.
13. VERIFY ALL FIELD SELECTABLE AUDIBILITY SETTINGS OF NOTIFICATION APPLIANCES WITH FIRE ALARM CONTRACTOR.
14. UPON COMPLETION OF THE FIRE ALARM SYSTEM INSTALLATION AND PROGRAMMING, THE INSTALLING CONTRACTOR SHALL PERFORM FINAL TESTING OF THE ENTIRE SYSTEM, PER ALL APPLICABLE CODES, AND SHALL COORDINATE AND PERFORM A FINAL FIRE ALARM SYSTEM INSPECTION.
15. PROVIDE OFF–SITE MONITORING AS REQUIRED BY THE INTERNATIONAL FIRE CODE, SECTION 907.15 AND THE LOCAL AUTHORITY HAVING JURISDICTION.
16. INSTALLING CONTRACTOR SHALL, PHYSICALLY, LABEL ALL INITIATING DEVICES AND NOTIFICATION APPLIANCE CIRCUIT END OF LINE (WHEN WIRING CLASS "B"). THESE LABELS SHALL BE IN PLACE PRIOR TO START–UP AND TESTING.

FIRE ALARM SYMBOL LEGEND

NOTE: ALL SYMBOLS MAY NOT BE USED ON THIS PROJECT

SYMBOL	DESCRIPTION	MOUNTING
FCP	FIRE ALARM CONTROL PANEL	WALL–TOP @ 66"
FPS	FIRE ALARM POWER SUPPLY	FIELD VERIFY
FSA	FIRE SYSTEM ANNUNCIATOR	WALL–TOP @ 66"
FSD	FIRE/SMOKE DAMPER	BY OTHERS
	SMOKE DETECTOR	CEILING
	DUCT SMOKE DETECTOR	BY OTHERS
	HEAT DETECTOR	CEILING
CM	ADDRESSABLE CONTROL MODULE	FIELD VERIFY
MM	ADDRESSABLE MINI MONITOR MODULE	FIELD VERIFY
P	MANUAL PULL STATION	WALL @ 48"
R	CONTROL RELAY (MULTI–VOLTAGE)	FIELD VERIFY
RM	ADDRESSABLE RELAY MODULE	FIELD VERIFY
RTS	REMOTE TEST STATION	FIELD VERIFY
	WATER FLOW SWITCH	BY OTHERS
	VALVE TAMPER SWITCH	BY OTHERS
LT	LOW TEMPERATURE SWITCH	BY OTHERS
	BELL	BY OTHERS
	CEILING MOUNT STROBE	FIELD VERIFY
	CEILING MOUNT HORN / STROBE	FIELD VERIFY
	CEILING MOUNT SPEAKER / STROBE	FIELD VERIFY
	HORN	WALL @ 10'–0
	HORN / STROBE	WALL 80"–96"
SS	SPEAKER / STROBE	WALL 80"–96"
SP	SPEAKER	WALL @ 90"
	STROBE	WALL 80"–96"
KB	KNOX BOX	FIELD VERIFY

ABBREVIATION	DESCRIPTION
E	EXISTING
G	WITH GUARD
P	PENDENT MOUNT
R	RESIDENTIAL (110V)
S	SOUNDER BASE
WP	WEATHER PROOF
EOL	END OF LINE RESISTOR
EOLR	END OF LINE RELAY
AWG	AMERICAN WIRE GAUGE
TWP	TWISTED PAIR
TWSP	TWISTED SHIELDED PAIR
FPLP	FIRE POWER LIMITED PLENUM
FPLR	FIRE POWER LIMITED RISER

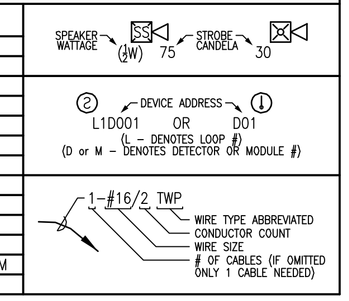

APPLICABLE CODES:

MAINE UNIFORM ENERGY & BUILDING CODE
PORTLAND CITY CODE, CHAPTER10, FIRE PREVENTION & PROTECTION
NFPA 1, FIRE CODE, & NFPA 101, LIFE SAFETY CODE

RESERVED FOR CITY STAMP

REVISION	DESCRIPTION	DATE
0	ISSUED FOR REVIEW & APPROVAL	8/12/2015
1	REVISED – SPRINKLER MONITORING PLAN	8/20/2015

FACP Battery Calculation

8/19/2015

PROJECT NAME: PORTHOLE RESTAURANT
Required Standby Time: 24 Hours
Required Alarm Time: 5 Minutes

AC Branch Current

AC Branch Current: Amps @ 120V

Regulated Load in Standby

Device Type	Number of Devices		Current (Amps)		Total Current (Amps)
FACP MAINBOARD	1	X	0.14500	=	0.14500
SMOKE DETECTOR	1	X	0.00030	=	0.00030
MONITOR MODULE	3	X	0.00035	=	0.00105
PULL STATION	1	X	0.00038	=	0.00038
TOTAL STANDBY LOAD					0.14673

Regulated Load in ALARM

Device Type	Number of Devices		Current (Amps)		Total Current (Amps)
FACP MAINBOARD	1	X	0.27500	=	0.27500
SMOKE DETECTOR	1	X	0.06500	=	0.06500
MONITOR MODULE	3	X	0.00060	=	0.00180
PULL STATION	1	X	0.00500	=	0.00500
NAC–1 (See Voltage Drop Calculations)	1	X	0.38800	=	0.38800
NAC–2 (See Voltage Drop Calculations)	1	X	0.00000	=	0.00000
NAC–3 (See Voltage Drop Calculations)	1	X	0.00000	=	0.00000
NAC–4 (See Voltage Drop Calculations)	1	X	0.00000	=	0.00000
TOTAL ALARM LOAD					0.73480

Battery Requirements

Standby Load			Required Standby Time in Hours		
Current (Amps)	0.14673	X	24.00000	=	3.52140
Alarm Load			Required Alarm Time in Hours		
Current (Amps)	0.73480	X	0.08333	=	0.06123
Total Ampere Hours (before derating factor)					3.58263
Derating Factor				X	1.2
TOTAL AMPERE HOURS REQUIRED				=	4.29916
BATTERIES TO BE PROVIDED (2 – 12v)					7 AH

Point to Point NAC Voltage Drop Calculation

8/19/2015

Project Name: PORTHOLE RESTAURANT
Circuit Number: NAC–1

			Wire Gauge	Resistance Per 1000
Nominal System Voltage	20.4	volts		
Minimum Device Voltage	16.0	volts		
Distance from source to 1st device	10	feet	14	3.07
Wire Gauge for balance of circuit			14	3.07
Max Output Current	1.50	amps		
Total Circuit Current	0.388	amps		
End of Line Voltage	20.32	volts		

Circuit is within limits

	Device Current	Distance previous device	Voltage at Device	Drop from source	Percent Drop
Device 1	0.212	10	20.38	0.024	0.12%
Device 2	0.176	50	20.32	0.078	0.38%
Totals	0.388	60			

Notes:
Wire resistance is doubled in the calculations for two wires (Positive and Negative).
The voltage calculated to the last device must not be lower than the manufactures listed minimum operating voltage (IE: rated operating voltage 16–33 VDC (24 VDC nominal)).

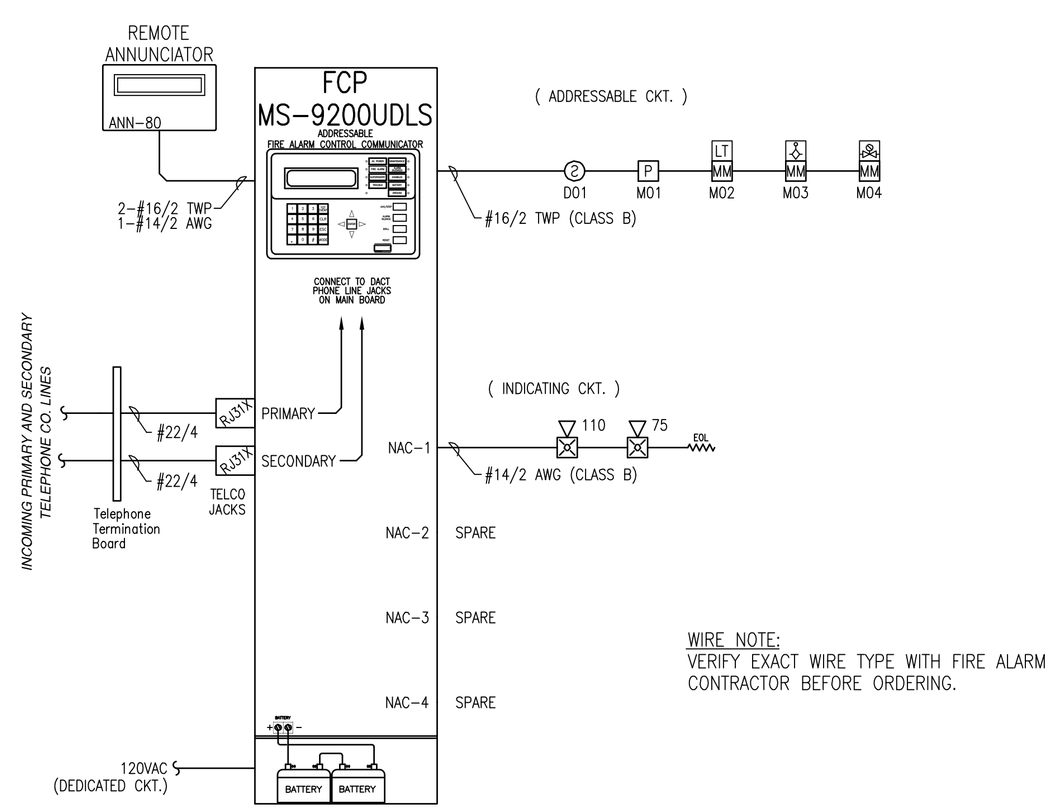

WIRE NOTE:
VERIFY EXACT WIRE TYPE WITH FIRE ALARM CONTRACTOR BEFORE ORDERING.

FIRE ALARM RISER DIAGRAM

SCHEMATIC: NO SCALE

OPERATIONS MATRIX

FIRE ALARM INPUT	FIRE ALARM OUTPUT	ACTIVATE ALARM INDICATOR	ACTIVATE AUDIBLE ALARM	ACTIVATE SUPERVISORY INDICATOR	ACTIVATE AUDIBLE SUPERVISORY SIGNAL	ACTIVATE TROUBLE INDICATOR	ACTIVATE AUDIBLE TROUBLE INDICATOR	TRANSMIT ALARM SIGNAL	TRANSMIT SUPERVISORY SIGNAL	TRANSMIT TROUBLE SIGNAL
SMOKE DETECTORS	●	●	●					●		
PULL STATIONS	●	●	●					●		
WATERFLOW SWITCHES	●	●	●					●		
VALVE TAMPER SWITCHES				●	●				●	
LOW TEMPERATURE SWITCHES				●	●				●	
FIRE ALARM AC POWER FAIL						●	●			●
FIRE ALARM LOW BATTERY						●	●			●
OPEN CIRCUIT						●	●			●
GROUND FAULT						●	●			●
NAC SHORT CIRCUIT						●	●			●
LOSS OF AC TO BUILDING						●	●			●

CUNNINGHAM
Security Systems
10 Princes Point Road, Yarmouth, Maine 04096
Office: 207.846.3350 • Fax: 207.846.6080

PORTHOLE RESTAURANT
20 CUSTOM HOUSE WHARF
PORTLAND, MAINE 04101
BATTERY CALC, DETAILS, LEGEND, MATRIX, NOTES

DRAWN	JPB UNICAD JOB #15521
CHECKED	WAYNE B. HAWS NICET IV 90496
DATE	8/20/2015
REVISION	1
SCALE	NONE

shop drawings created by:
5794 W. 4000 So.
Hooper, UT 84315
Office: 801.985.0410
UNICAD Inc.
www.unicad.net
Fire Alarm Design & Drafting Services

FA-1