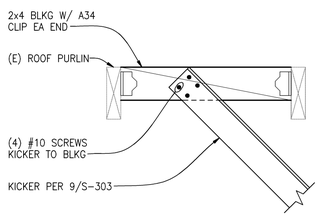

CHANNEL KICKER CONNECTION AT TOP

SCALE: 1 1/2"=1'-0"

1 (4)

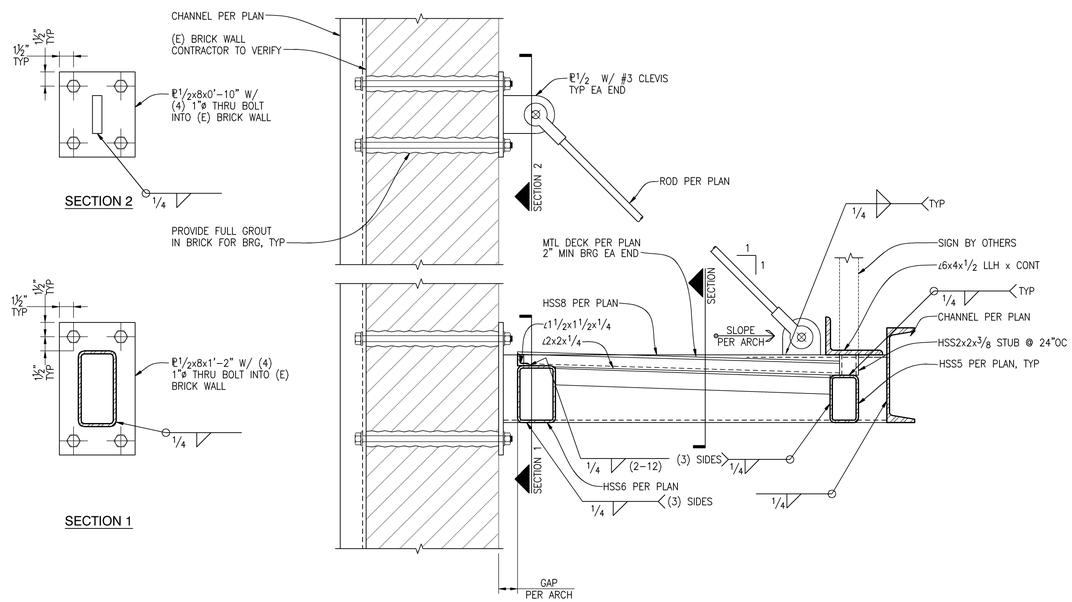

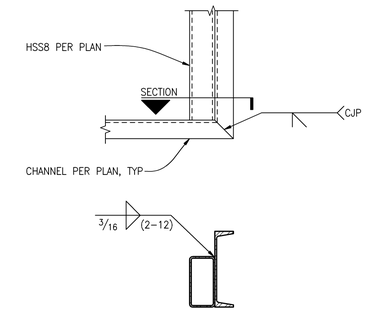

PLAN DETAIL - CANOPY CORNER

SCALE: 1"=1'-0"

4 (4)

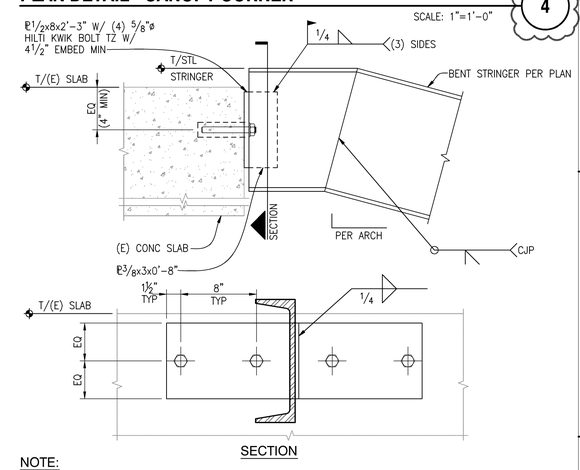

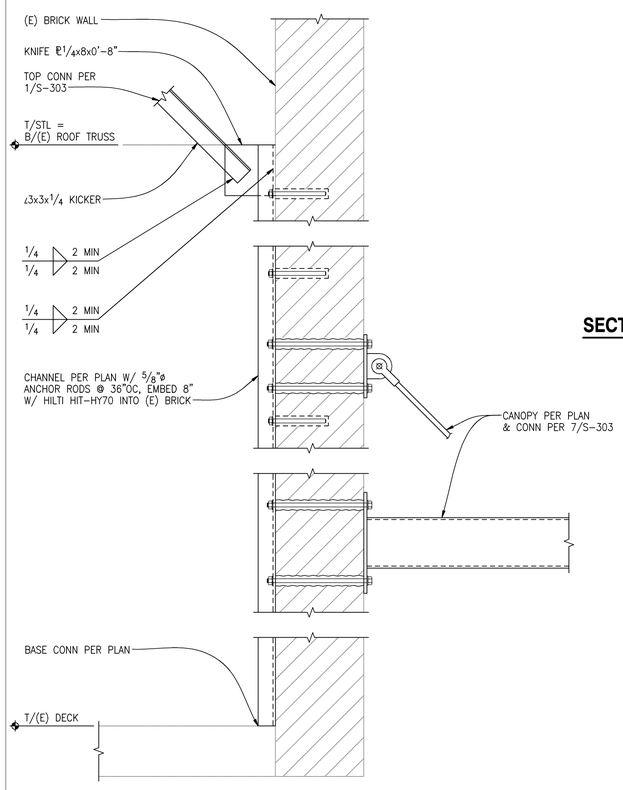

SECTION AT CANOPY

SCALE: 1 1/2"=1'-0"

7 (4)

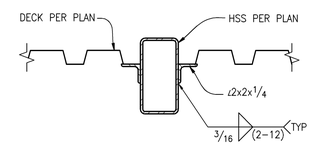

NOTE:
CONTRACTOR TO VERIFY LOCATIONS OF ALL REINFORCING. DO NOT CUT REINFORCING.

STRINGER TO SLAB CONNECTION

SCALE: 1 1/2"=1'-0"

8 (4)

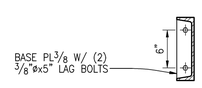

PLAN

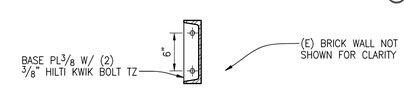

PLAN

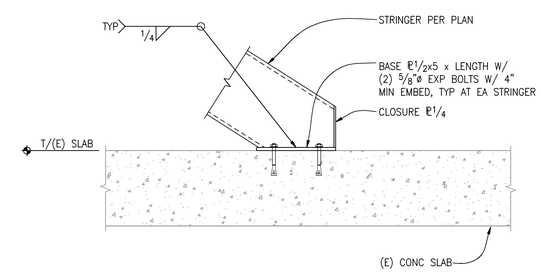

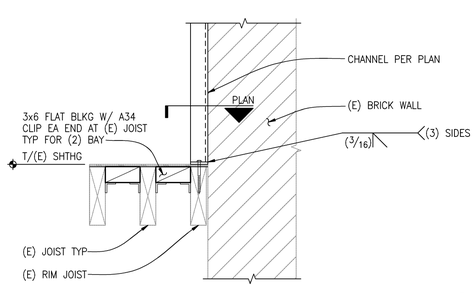

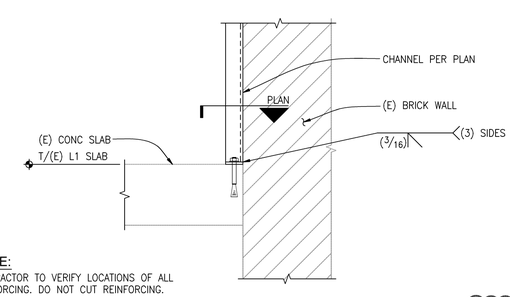

NOTE:
CONTRACTOR TO VERIFY LOCATIONS OF ALL REINFORCING. DO NOT CUT REINFORCING.

CHANNEL

SCALE: 1"=1'-0"

9 (4)

CHANNEL BASE CONNECTION

SCALE: 1"=1'-0"

10 (4)

CHANNEL BASE CONNECTION

SCALE: 1"=1'-0"

11 (4)

STRINGER BASE DETAIL AT EXISTING SLAB

05608M

SCALE: 1"=1'-0"

12

OWNER:
WILLIAMS-SONOMA, INC.
3250 Van Ness Avenue
San Francisco, CA 94
T 415 616 8602
F 415 439 8164
www.williams-sonomair

DCI ENGINEERS®
818 STEWART STREET • SUITE 1000
SEATTLE, WASHINGTON 98101
PHONE: (206) 332-1800 • FAX: (206) 332-1600
WEBSITE: www.dciengineers.com
CIVIL / STRUCTURAL

© Copyright 05/2017 D'Ambola Conversano Inc. All Rights Reserved
This document and its ideas and designs may not be traced, in whole or in part, without the express written permission of D'Ambola Conversano Inc. disclaims any responsibility for the unauthorized use.

STATE OF MAINE
TROY E. BEALE
No. 11464
LICENSED PROFESSIONAL ENGINEER

Reviewed for Code Compliance
Jurisdiction: Portland, ME
Date: 05/16/17

CALLISON
AN ARCADIS COMPANY
CALLISON, LLC
www.callison.com

west elm

Downtown Portland
164 Middle Street
Portland, ME 04101

PROJECT #006-160335.00

ISSUED / REVISED	DATE
QA SET	11/11/16
LL/PERMIT SET	11/21/16
PERMIT ADDENDUM	05/05/17 (4)

STRUCTURAL DETAILS

S-303