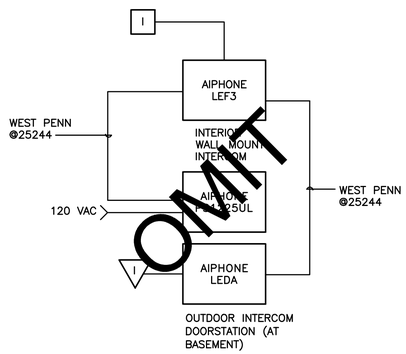

2A WIRING DIAGRAM

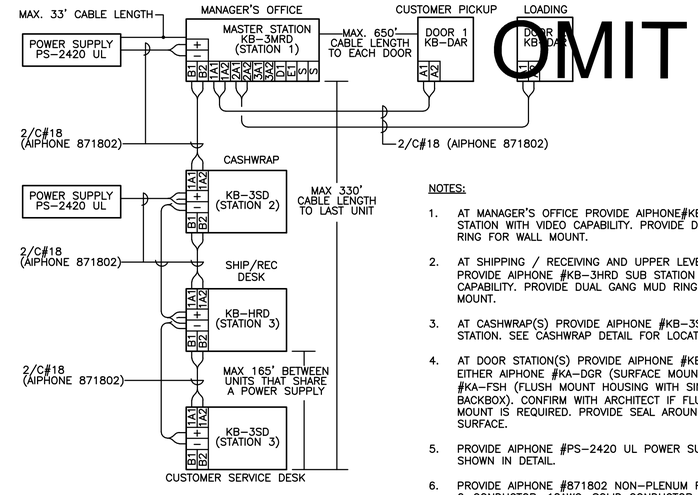

NOTES:

1. AT MANAGER'S OFFICE PROVIDE AIPHONE#KB-3MRD MASTER STATION WITH VIDEO CAPABILITY. PROVIDE DUAL GANG MUD RING FOR WALL MOUNT.
2. AT SHIPPING / RECEIVING AND UPPER LEVEL STOCK PROVIDE AIPHONE #KB-3HRD SUB STATION WITH VIDEO CAPABILITY. PROVIDE DUAL GANG MUD RING FOR WALL MOUNT.
3. AT CASHWRAP(S) PROVIDE AIPHONE #KB-3SD AUDIO ONLY STATION. SEE CASHWRAP DETAIL FOR LOCATION.
4. AT DOOR STATION(S) PROVIDE AIPHONE #KB-DAR WITH EITHER AIPHONE #KA-DGR (SURFACE MOUNT HOUSING), OR #KA-FSH (FLUSH MOUNT HOUSING WITH SINGLE GANG BACKBOX). CONFIRM WITH ARCHITECT IF FLUSH OR SURFACE MOUNT IS REQUIRED. PROVIDE SEAL AROUND DEVICE TO SURFACE.
5. PROVIDE AIPHONE #PS-2420 UL POWER SUPPLIES AS SHOWN IN DETAIL.
6. PROVIDE AIPHONE #871802 NON-PLENUM RATED, 2-CONDUCTOR, 18AWG, SOLID CONDUCTOR, FPLP, LOW VOLTAGE CABLE AS INDICATED. PROVIDE PLENUM RATED BASED ON CEILING RATING WHERE CABLE IS ROUTED.

ELECTRICAL CONTRACTOR SHALL PROVIDE COMPLETE SYSTEM. THIS SHALL INCLUDE COMMISSIONING AND DEMONSTRATION OF SYSTEM OPERATION WITH STORE PERSONNEL. CONTRACTOR SHALL PROVIDE LABELING ON DIRECTORY AT EACH STATION AND SET SEPARATE DOOR CHIME TONES FOR EACH DOOR LOCATION.

ALL LINE VOLTAGE WIRING IS TO BE IN CONDUIT. ALL LOW VOLTAGE WIRING IS TO BE PLENUM RATED OR IN CONDUIT.

AIPHONE INTERCOM (AUDIO/VISUAL) SYSTEM DETAIL

1
NOT TO SCALE

AIPHONE INTERCOM (AUDIO ONLY) SYSTEM DETAIL

4
1/4" = 1'-0"

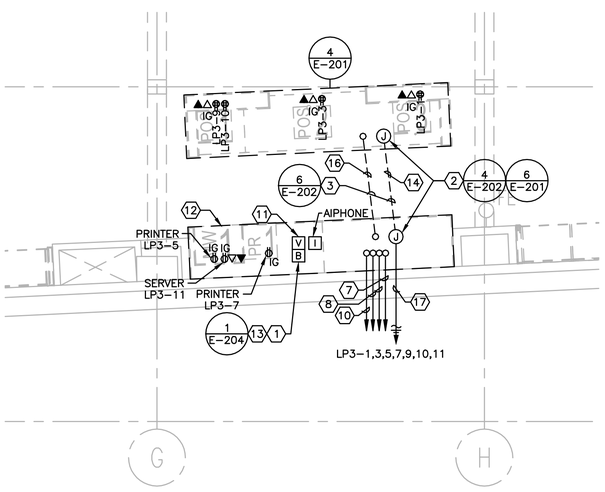

KEYED NOTES:

1. PROVIDE DOOR BUZZERS, LOW VOLTAGE TRANSFORMER, PUSH-BUTTON AND WIRING FOR DOOR BUZZER SYSTEM. SIZE TRANSFORMER AS REQUIRED.
2. ELECTRICAL CONTRACTOR PROVIDE FLOOR MOUNTED JUNCTION BOXES FOR POWER, AND STUB-INS FOR DATA AND VOICE SERVICES TO CASH REGISTERS. ALL JUNCTION BOXES AND STUB-INS SHALL BE SIZED AND ARRANGED AS REQUIRED TO CONCEAL AT ACCESSIBLE LOCATION BENEATH MILLWORK ACCESS PANEL. PRIOR TO INSTALL COORDINATE WITH MILLWORK CONTRACTOR, THE EXACT LOCATION OF ACCESS PANEL.
3. CASHWRAP SERVICE CONDUIT RUNS.
4. NOT USED.
5. NOT USED.
6. NOT USED.
7. CONDUIT TO CHIME AT SHIP/REC DESK.
8. CONDUIT FOR DATA AND VOICE TO TTB.
9. NOT USED.
10. 1/2" C. TO SOUND SYSTEM CABINET FOR VOLUME CONTROL.
11. VOLUME CONTROL MOUNTED IN CASHWRAP.
12. MANAGER'S WORKSTATION.
13. CHIME MOUNTED IN CASHWRAP.
14. CONDUIT FOR DATA AND VOICE.
15. NOT USED.
16. CONDUIT FOR CASHWRAP POWER.
17. 10 #10 & 5 #12 GND. IN 1" C.

NOTE:
REFER TO CONDUIT RISER DIAGRAM FOR ALL CONDUIT SIZES.

CASHWRAP - POWER AND SIGNAL PLAN

3
1/4" = 1'-0"

ALL LINE VOLTAGE WIRING IS TO BE IN CONDUIT. ALL LOW VOLTAGE WIRING IS TO BE IN CONDUIT.

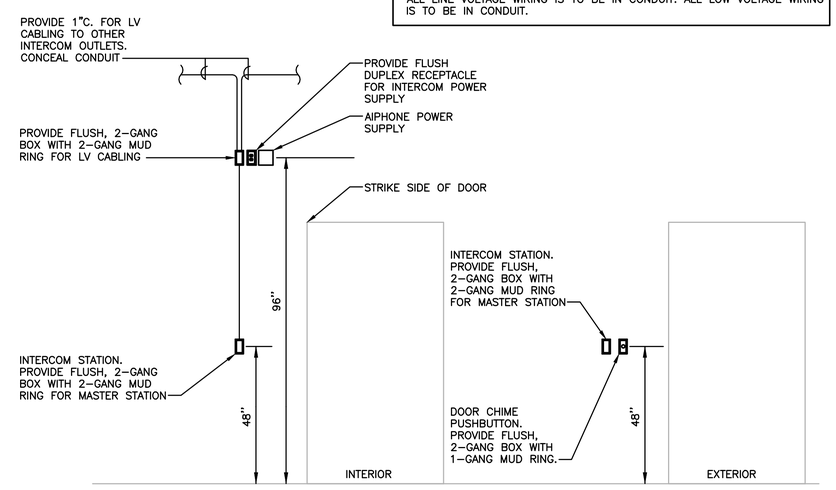

2B DEVICE ROUGH-IN PLAN

AIPHONE ENTRANCE INTERCOM SYSTEM

2
NOT TO SCALE

OWNER:
WILLIAMS-SONOMA, INC.
3250 Van Ness Avenue
San Francisco, CA 94
T 415 616 8602
F 415 439 8164
www.williams-sonomainc.com

Reviewed for Code Compliance
Authorized Signature
Date: 04/26/17

EEA
EEA Consulting Engineers
6615 Vaught Ranch Road, Suite 200
Austin, Texas 78730-2314 USA
512.744.4400 main 512.744.4444 fax
www.eeace.com

State of Registration MAINE
Firm Registration No. N/A
EEA Project No. 20166538

DRAWN BY: BMW
CHECKED BY: SMR

Digitally Signed
STATE OF MAINE
Michael N. Hart
No. 10507
LICENSED
PROFESSIONAL ENGINEER

Michael N Hart, PE (ME)
2017.03.08 15:33:52-06'00'

west elm
Dowtown Portland
164 Middle Street
Portland, ME 04101
PROJECT #006-160335.00

ISSUED / REVISED	DATE
PRELIMINARY SET	09/08/16
LL COORDINATION SET	11/08/16
LL/PERMIT SET	11/21/16

ELECTRICAL DETAILS

E-206