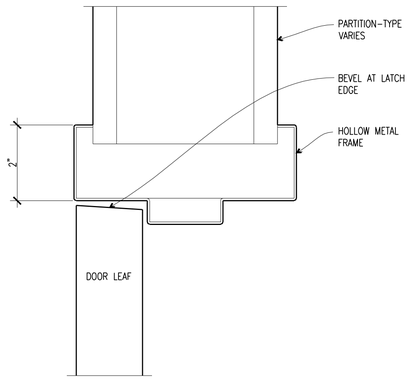

E1 HOLLOW METAL FRAME – DOOR JAMB
6"=1'-0" C1020-04

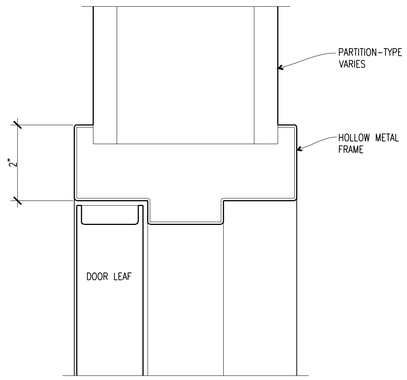

E3 HOLLOW METAL FRAME – DOOR HEAD
6"=1'-0" C1020-01

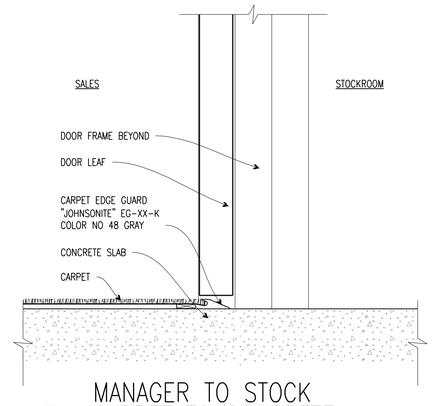

E5 MANAGER TO STOCK CARPET TO CONCRETE
3"=1'-0"

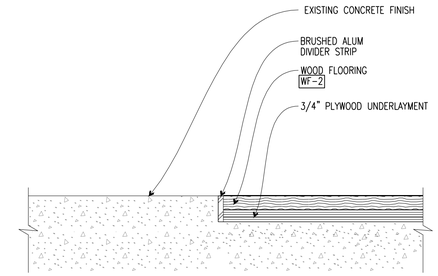

E7 CONCRETE TO WOOD FLOOR
3"=1'-0"

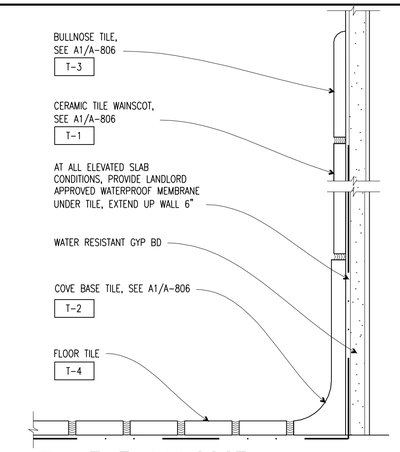

E9 TILE WAINSCOT
6"=1'-0"

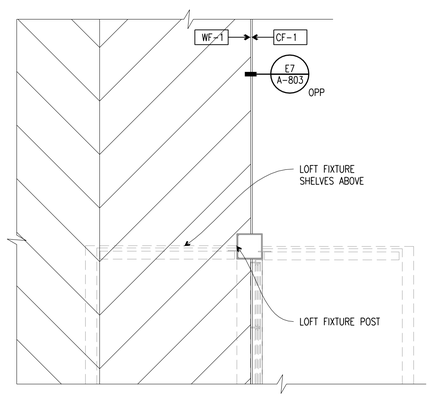

C1 FLOOR TRANSITION AT LOFT FIXTURE
1"=1'-0"

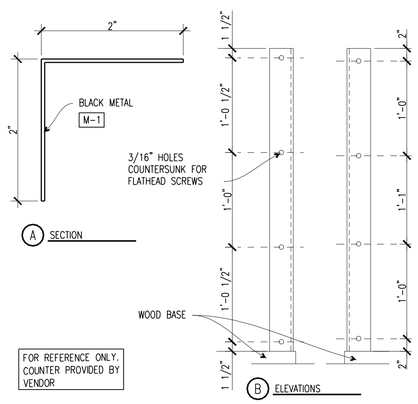

C3 SALESFLOOR METAL CORNER GUARD
NO SCALE

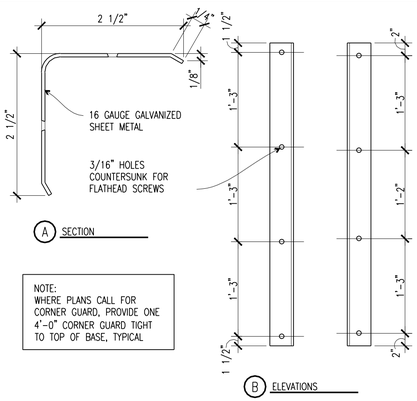

C5 BACK-OF-HOUSE METAL CORNER GUARD
NO SCALE

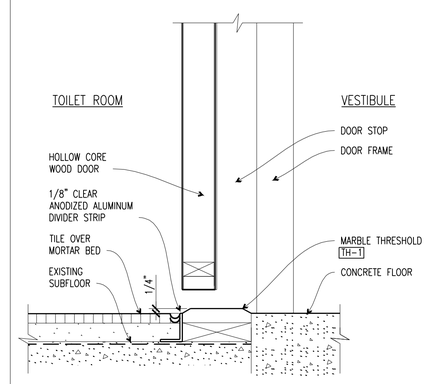

C7 CONCRETE TO CERAMIC TILE
3"=1'-0"

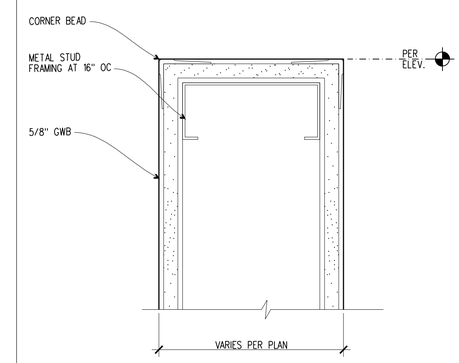

C9 PARTIAL HEIGHT PARTITION
6"=1'-0"

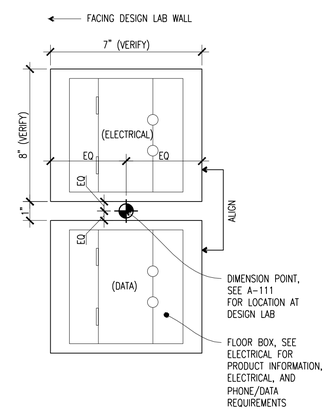

A1 DESIGN LAB FLOOR BOX
3"=1'-0"

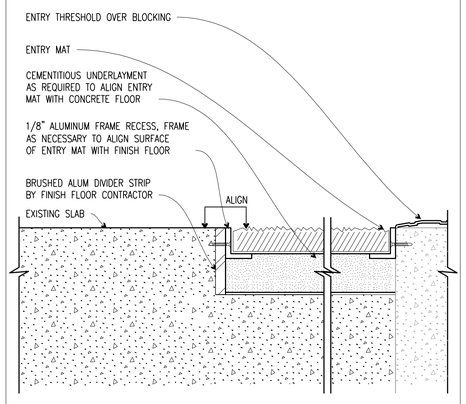

A5 CONCRETE TO ENTRY MAT
6"=1'-0"

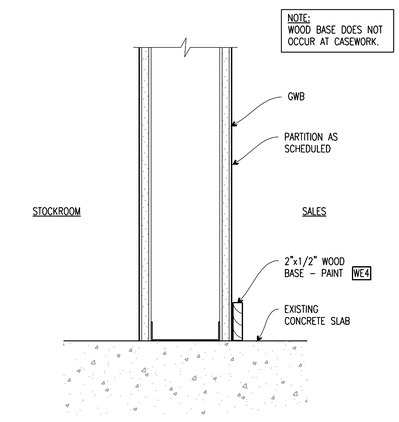

A7 WALL BASE
3"=1'-0"

OWNER:
WILLIAMS-SONOMA, INC.
3250 Van Ness Avenue
San Francisco, CA 94
T 415 616 8602
F 415 439 8164
www.williams-sonomair

Reviewed for Code Compliance
Approved Architect
Application Number
Date: 04/26/17

LICENSED ARCHITECT TODD K. BROOKS 4417 STATE OF MAINE

CALLISONRTKL™
A DESIGN CONSULTANCY OF ARCADIS
CALLISONRTKL, INC.
www.callisonrtkl.com

west elm
Dowtown Portland
164 Middle Street
Portland, ME 04101
PROJECT #006-160335.00

ISSUED / REVISED	DATE
PRELIMINARY SET	09/08/16
LL COORDINATION SET	11/08/16
LL/PERMIT SET	11/21/16

INTERIOR DETAILS

A-803

COPYRIGHT © 2016 CallisonRTKL Inc.