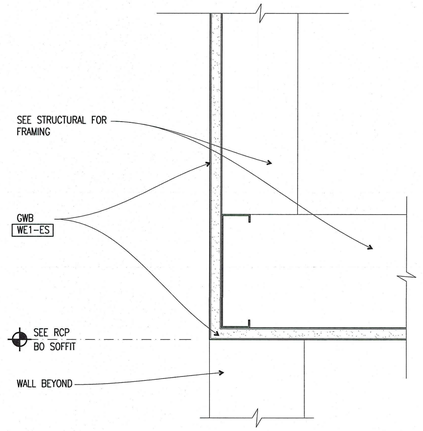

E2 SOFFIT @ BACK OF HOUSE
3"=1'-0"

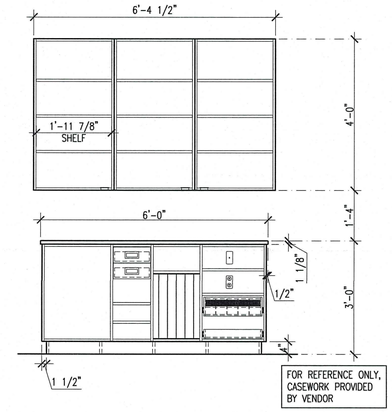

E7 CUSTOMER SERVICE COUNTER
1/2"=1'-0"

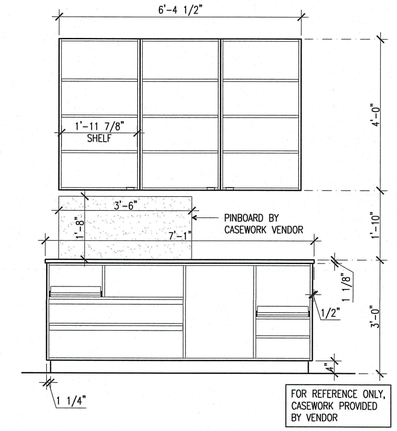

E9 SHIPPING/RECEIVING COUNTER
1/2"=1'-0"

PERMIT CORRECTIONS-2: PROVIDE A ROOF ACCESS LADDER PER CITY COMMENTS AND SCOPE CHANGE TO TENANT'S SCOPE.- DETAILS AS SHOWN A1/A-804

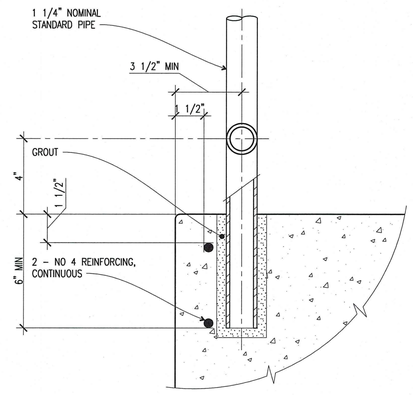

C5 WHEEL GUIDE RAIL
3"=1'-0"
C2010-105

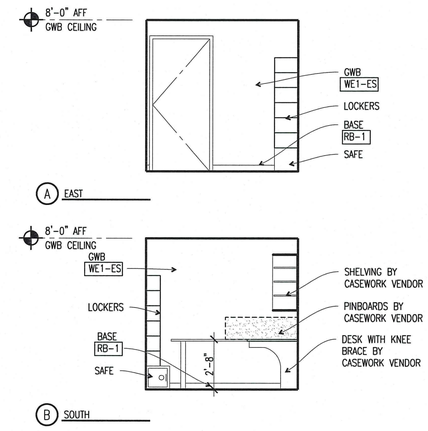

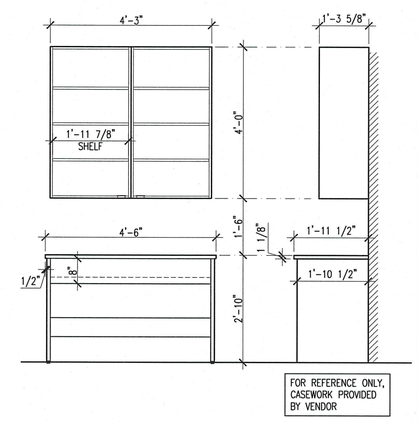

C9 EMPLOYEE COUNTER
1/2"=1'-0"

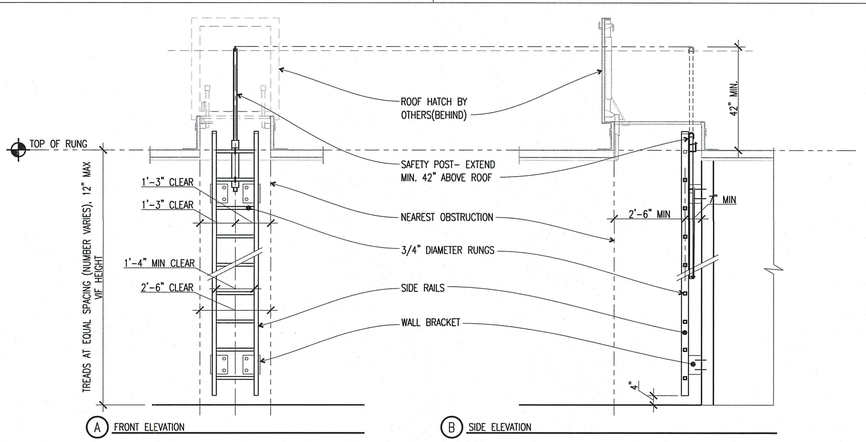

A1 FIXED LADDER TO ROOF HATCH (FOR HEIGHTS LESS THAN 20'-0")
3/8"=1'-0"
B3010RS-07

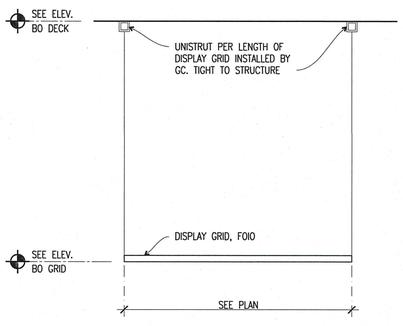

A5 DISPLAY GRID DETAIL
1"=1'-0"

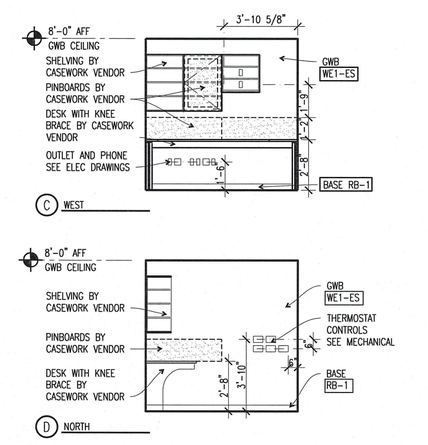

A7 MANAGER'S OFFICE ELEVATIONS
1/4"=1'-0"

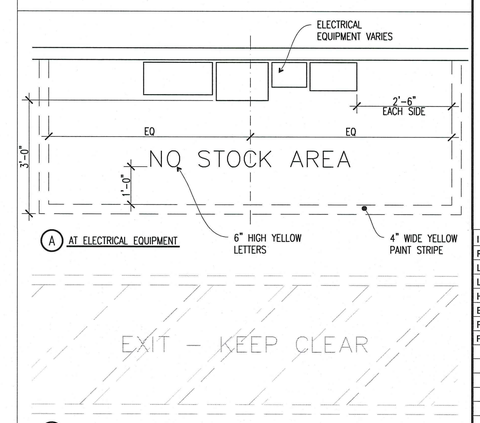

A9 CLEAR AREA STRIPING
1/2"=1'-0"

OWNER:
WILLIAMS-SONOMA, INC.
3250 Van Ness Avenue
San Francisco, CA 941
T 415 616 8602
F 415 439 8164
www.williams-sonomain

Reviewed for Code Compliance
Approved Inspector
Accessibility Inspector
Date: 04/26/17

LICENSED ARCHITECT
HODDY-EVON
NO. 4347
STATE OF MAINE
APR 17 2017

CALLISONRTKL
A DESIGN CONSULTANCY OF ARCADIS
CALLISONRTKL, INC.
www.callisonrtkl.com

west elm
Dowtown Portland
164 Middle Street
Portland, ME 04101
PROJECT #006-160335.00

ISSUED / REVISED	DATE
PRELIMINARY SET	09/08/16
LL COORDINATION SET	11/08/16
LL/PERMIT SET	11/21/16
HP REVIEW SET	01/11/17
BID SET	01/26/17
PERMIT CORRECTIONS	03/22/17
PERMIT CORRECTIONS-2	04/06/17

INTERIOR DETAILS

A-804

COPYRIGHT © 2016 CallisonRTKL Inc.