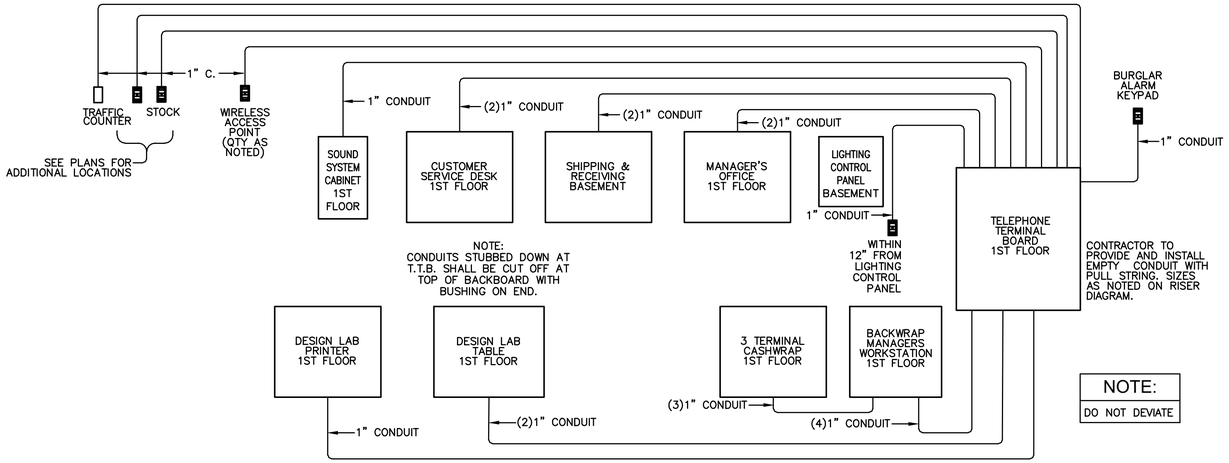

CONDUIT RISER DIAGRAM

1
NOT TO SCALE

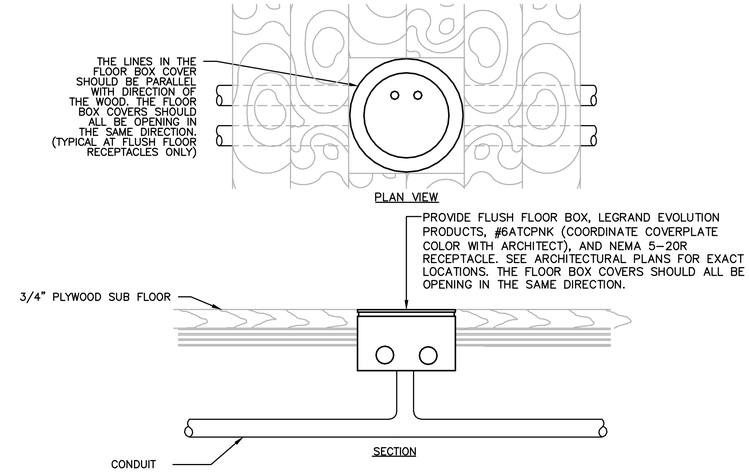

TYPICAL FLOOR BOX AND CONDUIT DETAIL

5
NOT TO SCALE

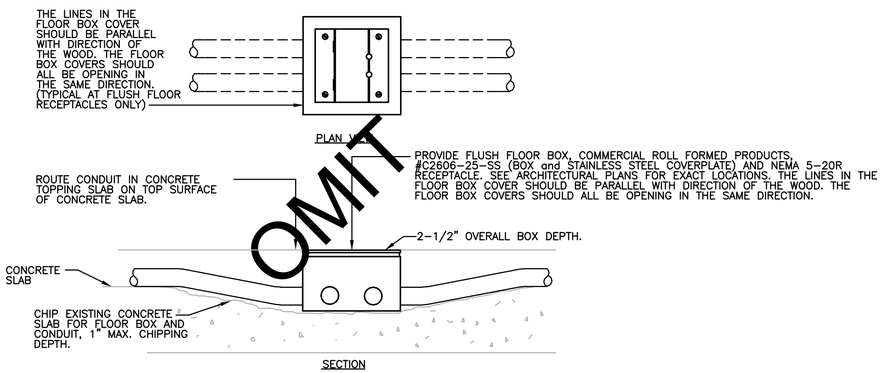

FLOOR BOX AND CONDUIT DETAIL FOR ELEVATED SITUATIONS

2
NOT TO SCALE

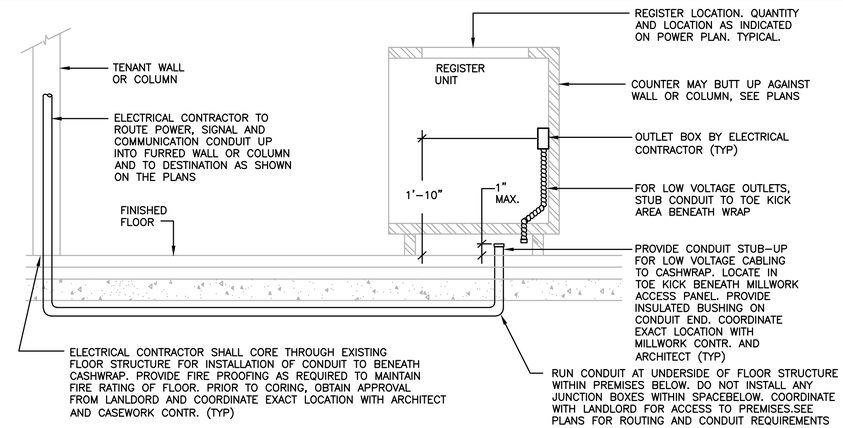

CASHWRAP ELEVATED FLOOR INSTALLATION

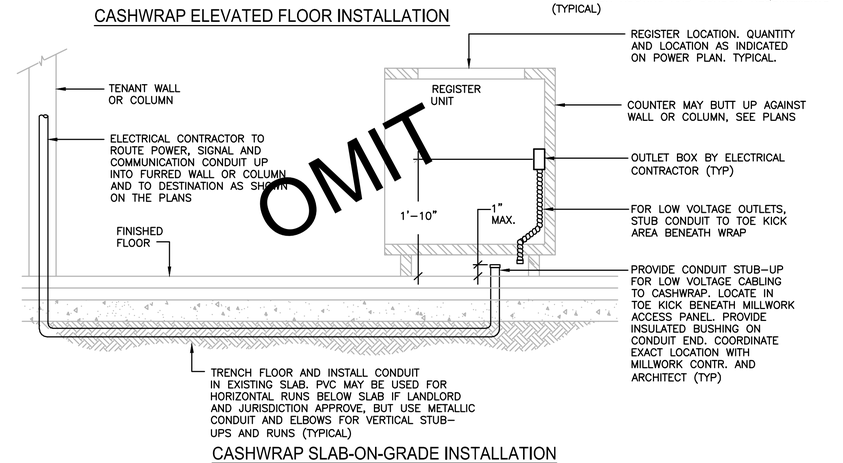

CASHWRAP SLAB-ON-GRADE INSTALLATION

CONTRACTOR REQUIREMENTS:

- VERIFY EXACT ROUTE FOR THE INSTALLATION OF THE ELECTRICAL AND TELEPHONE SERVICES IN THE FIELD WITH THE MALL BUILDING ENGINEER.
- OBTAIN LANDLORD'S APPROVAL FOR ALL SAW CUTTING AND CORE DRILLING. COORDINATE WITH BASE BUILDING EXISTING CONDITIONS FOR ACTUAL SLAB THICKNESSES. CONTRACTOR TO IDENTIFTY ALL EXISTING CONDITIONS.

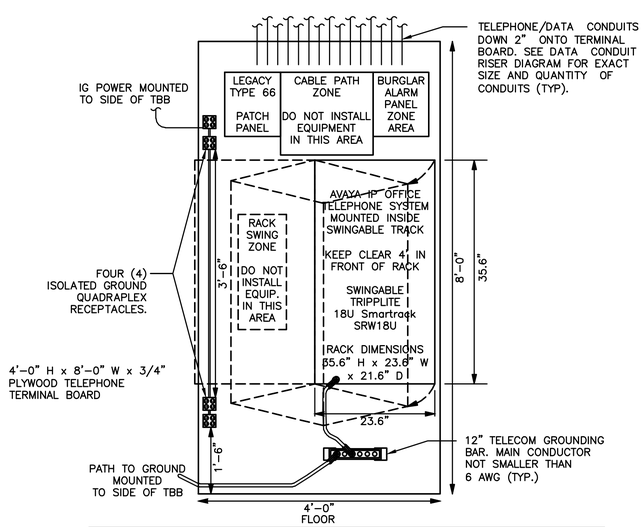

TELEPHONE TERMINAL BOARD (TTB) ELEVATION

3
NOT TO SCALE

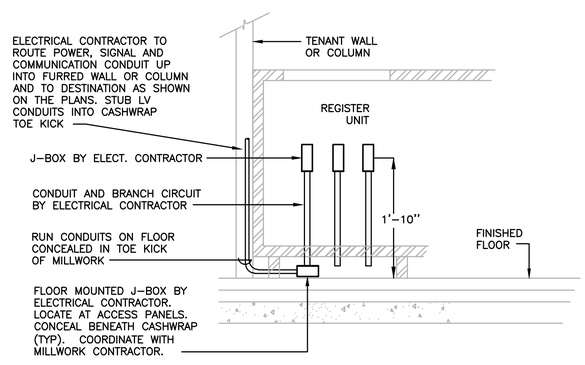

BACKWRAP / CASHWRAP ADJACENT TO WALL OR COLUMN

CASHWRAP SERVICE CONDUIT ELEVATION

6
NOT TO SCALE

OWNER:
WILLIAMS-SONOMA, INC.
3250 Van Ness Avenue
San Francisco, CA 94
T 415 616 8602
F 415 439 8164
www.williams-sonoma

Date: 04/26/17

EEA
EEA Consulting Engineers
6615 Vaught Ranch Road, Suite 200
Austin, Texas 78730-2314 USA
512.744.4400 main 512.744.4444 fax
www.eeace.com

State of Registration MAINE
Firm Registration No. N/A
EEA Project No. 20166538

DRAWN BY: BMW
CHECKED BY: SMR

Digitally Signed
STATE OF MAINE Michael N. Hart No. 10507 LICENSED PROFESSIONAL ENGINEER
Michael N Hart, PE (ME)
2017.03.08 15:32:19-06'00'

west elm
Downtown Portland
164 Middle Street
Portland, ME 04101
PROJECT #006-160335.00

ISSUED / REVISED	DATE
PRELIMINARY SET	09/08/16
LL COORDINATION SET	11/08/16
LL/PERMIT SET	11/21/16

ELECTRICAL DETAILS

E-202