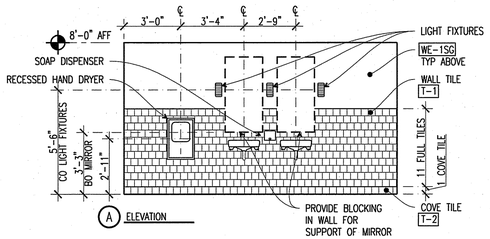

A ELEVATION

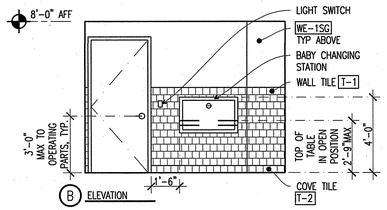

B ELEVATION

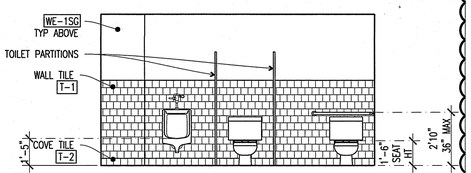

C ELEVATION

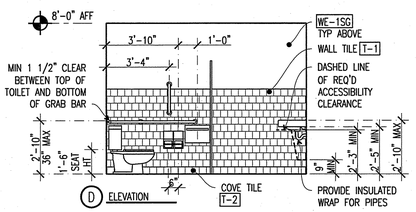

D ELEVATION

MEN'S TOILET ROOM

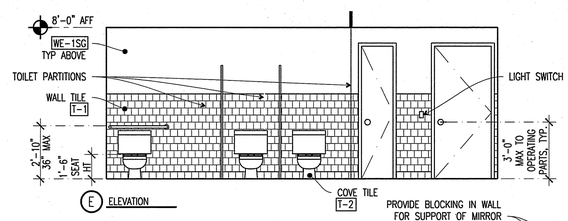

E ELEVATION

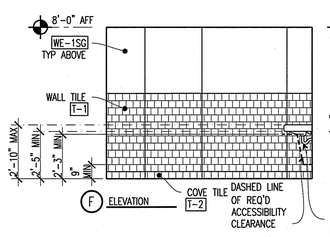

F ELEVATION

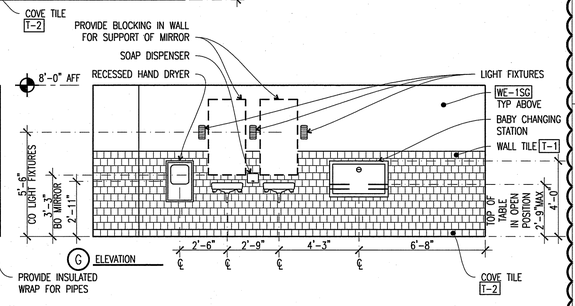

G ELEVATION

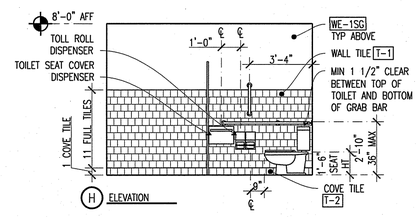

H ELEVATION

WOMEN'S TOILET ROOM

A1 PUBLIC TOILET ROOM ELEVATIONS

1/4"=1'-0"

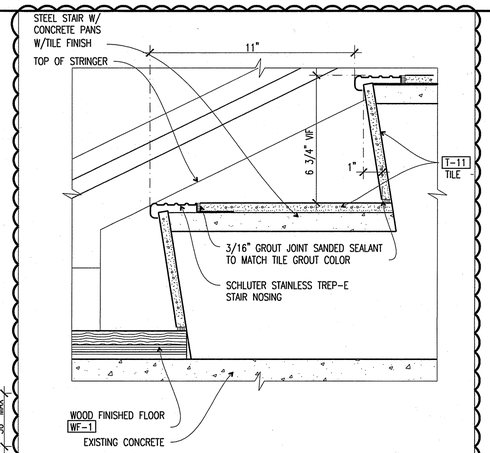

E5 ENLARGED RISER & TREAD

3"=1'-0"

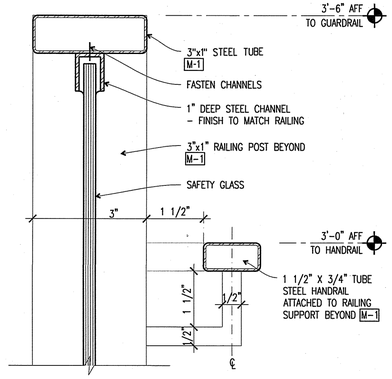

E7 HANDRAIL DETAIL

6"=1'-0"

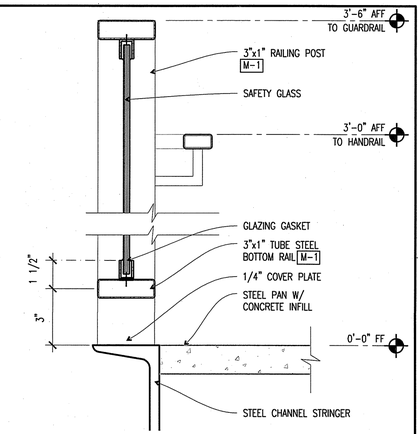

E9 HANDRAIL AT STAIR EDGE

3"=1'-0"

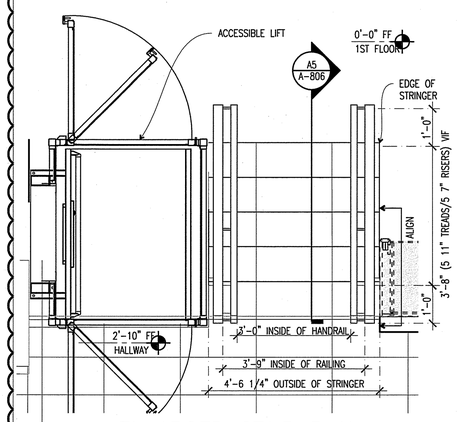

C5 ENLARGED STAIR PLAN

1/2"=1'-0"

CITY COMMENT: PROVIDE RISE AND RUN FOR STAIR TREADS
RESPONSE: RISE AND RUN HAVE BEEN PROVIDED AND NOTED TO VERIFY IN FIELD.
1

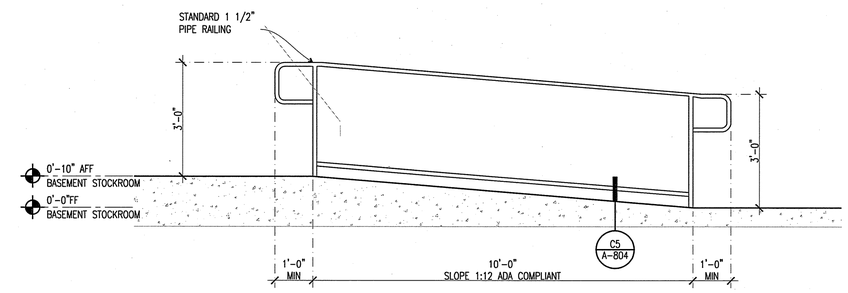

C7 ENLARGED RAMP SECTION

1/2"=1'-0"

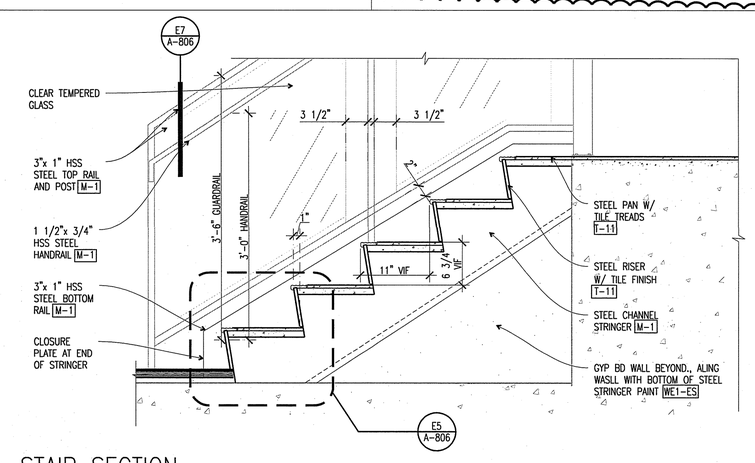

A5 STAIR SECTION

1"=1'-0"

1

CITY COMMENT: RAMP HAS TO MEET COMPLIANCE OF THE 2009 IBC. RECISE/ CLARIFY AS PREVIOUSLY REQUESTED ON OTHER PLAN SHEET
RESPONSE: THIS IS A BACK OF HOUSE SECONDARY RAMP NOT FOR PUBLIC USE. IT MEETS OSHA REQUIREMENTS AS INDICATED. THERE IS A SECOND RAMP IN THE STOCK ROOM THAT IS ACCESSIBLE FOR EMPLOYEES

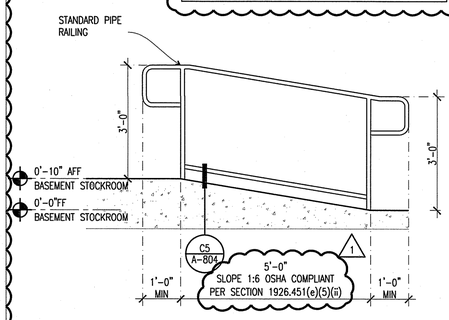

A9 ENLARGED RAMP SECTION

1/2"=1'-0"

OWNER:
WILLIAMS-SONOMA, INC.
3250 Van Ness Avenue
San Francisco, CA 941
T 415 616 8602
F 415 439 8164
www.williams-sonomain

Reviewed for Code Compliance
Approval Date: 04/26/17

LICENSED ARCHITECT
BOOK
CHAPTER 17
STATE OF MAINE

CALLISONRTKL™
A DESIGN CONSULTANCY OF ARCADIS
CALLISONRTKL, INC.
www.callisonrtkl.com

west elm
Dowtown Portland
164 Middle Street
Portland, ME 04101
PROJECT #006-160335.00

ISSUED / REVISED	DATE
PRELIMINARY SET	09/08/16
LL COORDINATION SET	11/08/16
LL/PERMIT SET	11/21/16
HP REVIEW SET	01/11/17
BID SET	01/26/17
PERMIT CORRECTIONS	03/22/17 1

INTERIOR DETAILS

A-806

COPYRIGHT © 2016 CallisonRTKL Inc.