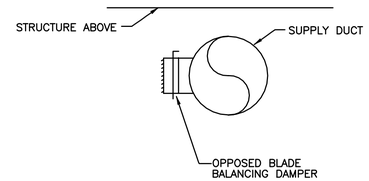

SIDE GRILLE INSTALLATION DETAIL | NOT TO SCALE | 3

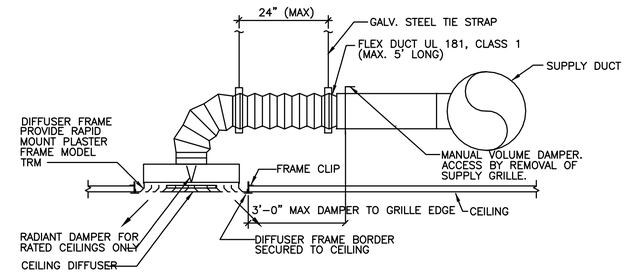

DIFFUSER CONNECTION DETAIL | NOT TO SCALE | 2

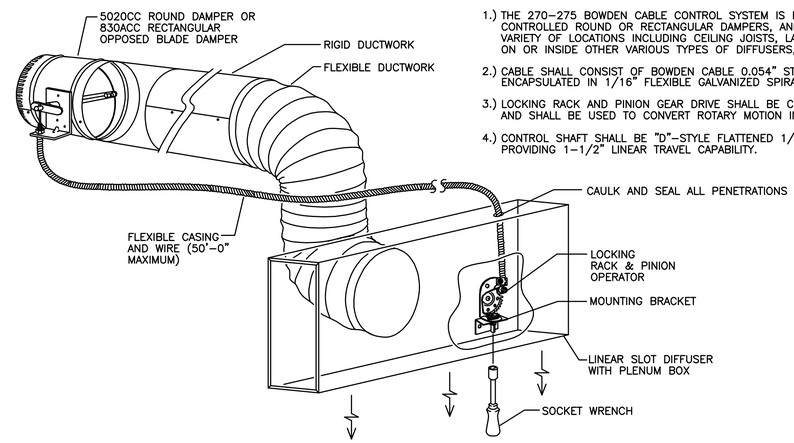

NOTES:

1.) THE 270-275 BOWDEN CABLE CONTROL SYSTEM IS DESIGNED FOR USE WITH EXTERNALLY CONTROLLED ROUND OR RECTANGULAR DAMPERS, AND CAN BE MOUNTED IN A WIDE VARIETY OF LOCATIONS INCLUDING CEILING JOISTS, LAY-IN CEILINGS, BEHIND GRILLES, ON OR INSIDE OTHER VARIOUS TYPES OF DIFFUSERS, ETC.

2.) CABLE SHALL CONSIST OF BOWDEN CABLE 0.054" STAINLESS STEEL CONTROL WIRE ENCAPSULATED IN 1/16" FLEXIBLE GALVANIZED SPIRAL WIRE SHEATH.

3.) LOCKING RACK AND PINION GEAR DRIVE SHALL BE CONSTRUCTED OF 14 GAUGE STEEL AND SHALL BE USED TO CONVERT ROTARY MOTION INTO PUSH-PULL MOTION.

4.) CONTROL SHAFT SHALL BE "D"-STYLE FLATTENED 1/4" DIAMETER WITH 265° ROTATION PROVIDING 1-1/2" LINEAR TRAVEL CAPABILITY.

LINEAR SLOT DIFFUSER DETAIL | NOT TO SCALE | 5

OWNER:
WILLIAMS-SONOMA, INC.
3250 Van Ness Avenue
San Francisco, CA 94
T 415 616 8602
F 415 439 8164
www.williams-sonomainc

Reviewed for Code Compliance
Authorized Signature
Date: 04/26/17

EEA
EEA Consulting Engineers
6615 Vaught Ranch Road, Suite 200
Austin, Texas 78730-2314 USA
512.744.4400 main 512.744.4444 fax
www.eeace.com

State of Registration MAINE
Firm Registration No. N/A
EEA Project No. 20166538

DRAWN BY: ARC
CHECKED BY: BKK

Digitally Signed
STATE OF MAINE
Michael N. Hart
No. 10507
LICENSED PROFESSIONAL ENGINEER
Michael N Hart, PE (ME)
2017.03.08 15:39:33-06'00'

west elm
Dowtown Portland
164 Middle Street
Portland, ME 04101
PROJECT #006-160335.00

ISSUED / REVISED	DATE
PRELIMINARY SET	09/08/16
LL COORDINATION SET	11/08/16
LL/PERMIT SET	11/21/16

MECHANICAL DETAILS

M-301