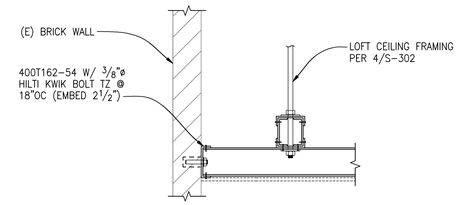

LOFT CEILING SOFFIT

SCALE: 1"=1'-0" (1)

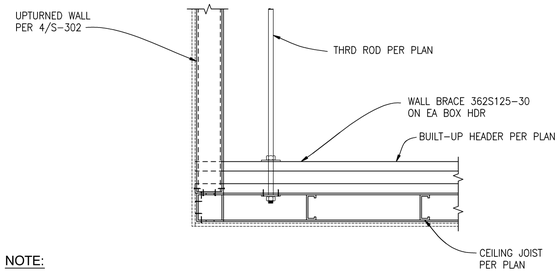

NOTE:

FOR MORE INFORMATION SEE 4/S-302.

LOFT CEILING SOFFIT

SCALE: 1"=1'-0" (2)

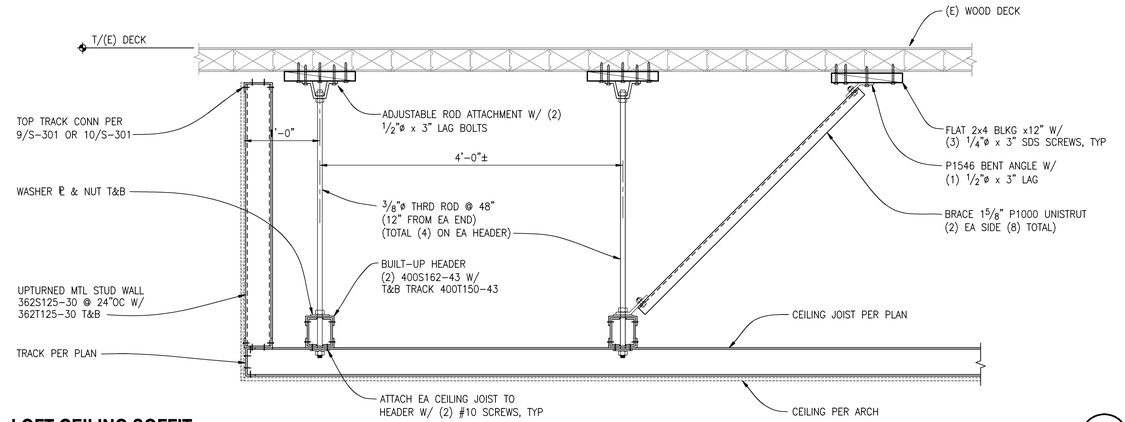

LOFT CEILING SOFFIT

SCALE: 1"=1'-0" (4)

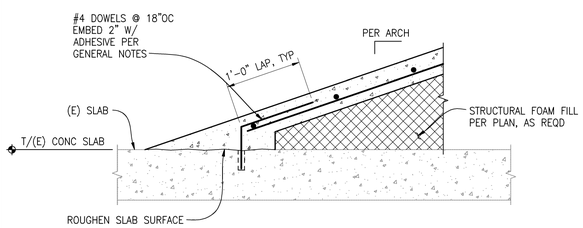

SECTION AT END OF RAMP

SCALE: 1"=1'-0" (5)

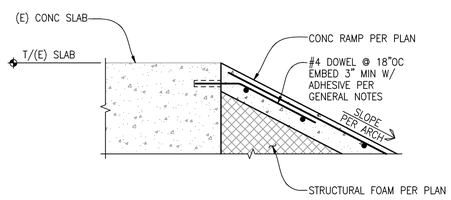

TOPPING SLAB AND RAMP

SCALE: 1"=1'-0" (6)

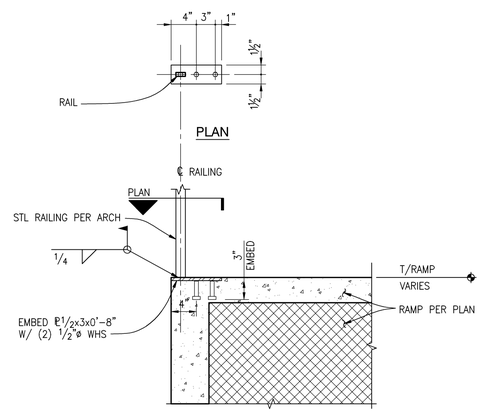

HANDRAIL CONNECTION AT RAMP

SCALE: 1"=1'-0" (7)

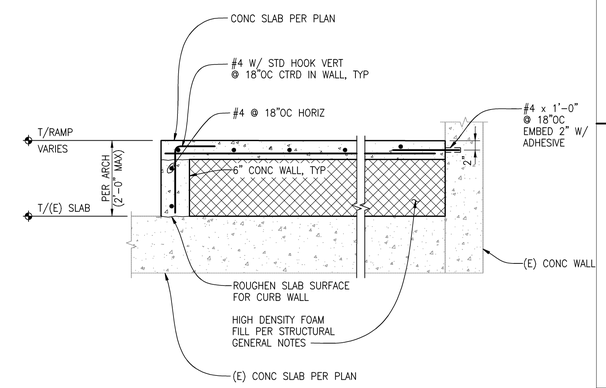

NOTE:

CONTRACTOR TO SCAN SLAB TO VERIFY LOCATION OF ALL EXISTING SLAB REINFORCEMENT. DO NOT CUT EXISTING REINFORCEMENT.

SLAB OVER-FRAMING

SCALE: 3/4"=1'-0" (8)

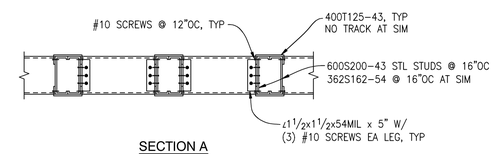

SECTION A

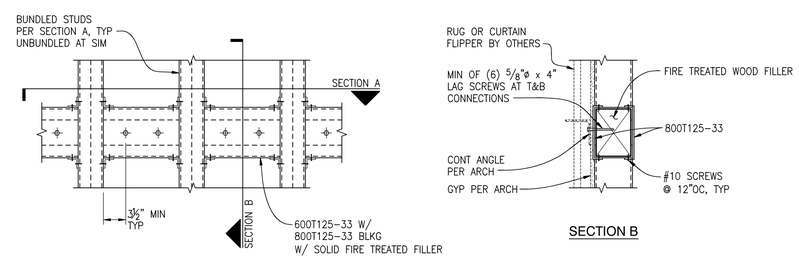

SECTION B

FLIPPER SUPPORT DETAILS

SCALE: 1"=1'-0" (12)

OWNER:
WILLIAMS-SONOMA, INC.
3250 Van Ness Avenue
San Francisco, CA 94
T 415 616 8602
F 415 439 8164
www.williams-sonomair

DCI ENGINEERS®
818 STEWART STREET • SUITE 1000
SEATTLE, WASHINGTON 98101
PHONE: (206) 332-1800 • FAX: (206) 332-1600
WEBSITE: www.dciengineers.com
CIVIL / STRUCTURAL

© Copyright 11/2016 D'Antola Consultants, Inc. All Rights Reserved
This document, and the ideas and designs incorporated herein, as an instrument of professional service, is the property of D'Antola Consultants Inc. Consultants assumes no responsibility for its unauthorized use.

Reviewed for Code Compliance
Approved as Noted
Authorized Signature
Date: 04/26/17

STATE OF MAINE
TROY A. BEAULIEU
No. 11464
LICENSED
PROFESSIONAL ENGINEER

CALLISON
AN ARCADIS COMPANY
CALLISON, LLC
www.callison.com

west elm

Downtown Portland

164 Middle Street
Portland, ME 04101

PROJECT #006-160335.00

ISSUED / REVISED	DATE
QA SET	11/11/16
LL/PERMIT SET	11/17/16

STRUCTURAL DETAILS

S-302