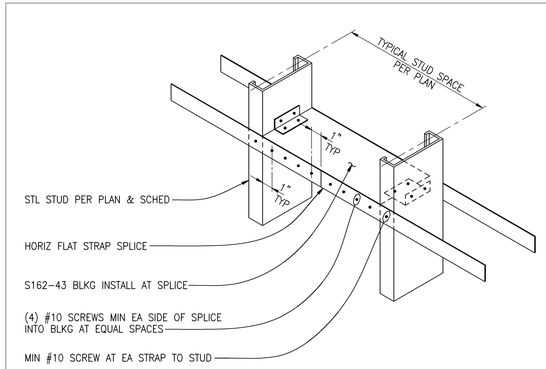

DOUBLE FLAT STRAP BRIDGING SPLICE (A)

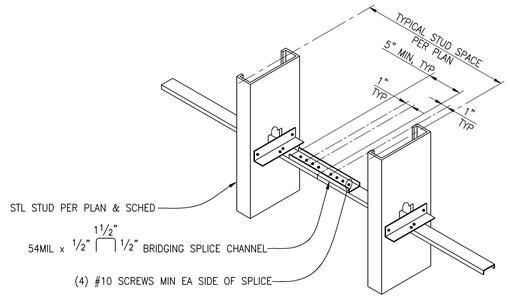

BRIDGING CHANNEL SPLICE (B)

NOTE:

ATTACH BLOCKING/BRIDGING TO STEEL STUDS PER 4/S-301.

TYPICAL STEEL STUD WALL BRIDGING SPLICE

07011 SCALE: 1 1/2"=1'-0" (2)

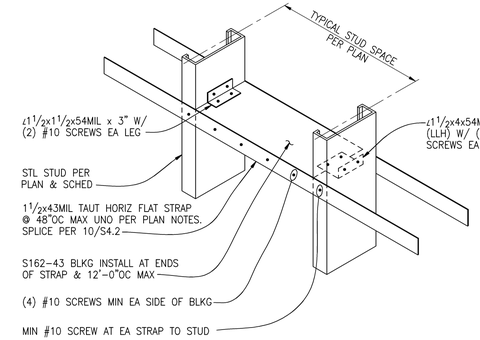

DOUBLE FLAT STRAP BRIDGING WITH BLOCKING (A)

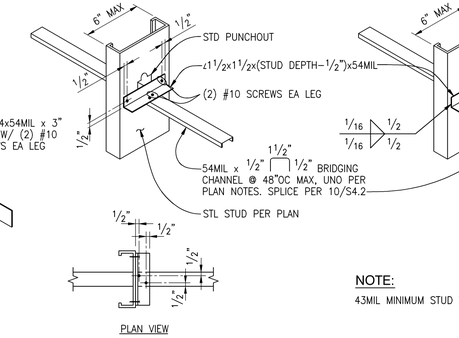

SCREW ATTACHED BRIDGING CHANNEL WITH ANGLE (B)

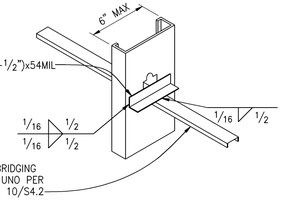

WELD ATTACHED BRIDGING CHANNEL WITH ANGLE (C)

NOTE:

43MIL MINIMUM STUD THICKNESS FOR WELDING.

NOTE:

PROVIDE BRIDGING THRU OPTIONS A, B, OR C FOR STUD DEPTHS 6" OR LESS. FOR STUD DEPTHS GREATER THAN 6" USE OPTION A.

TYPICAL STEEL STUD WALL BRIDGING

07010M SCALE: NONE (4)

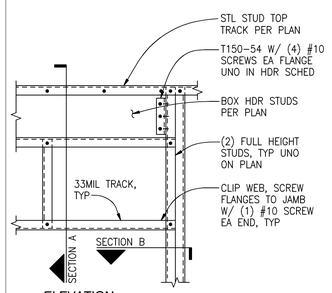

ELEVATION

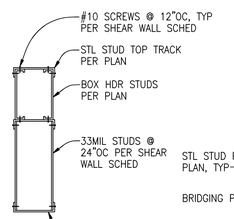

SECTION A

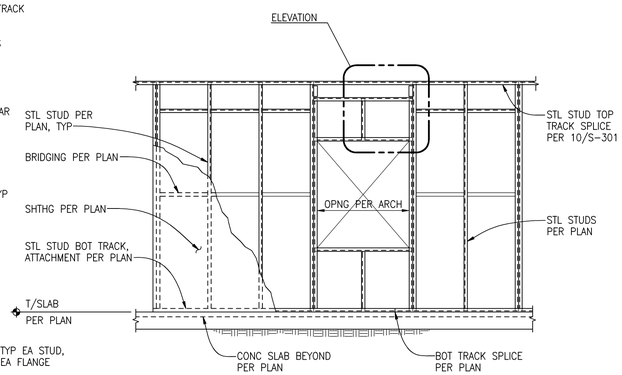

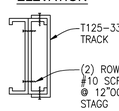

SECTION B

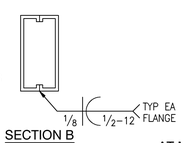

SECTION B OPTIONAL

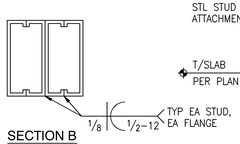

SECTION B AT MULTIPLE STUDS

TYPICAL STEEL STUD WALL ELEVATION

07330M SCALE: NONE (6)

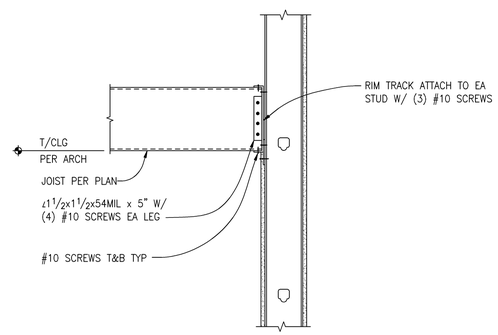

TYPICAL WALL WITH JOISTS PERPENDICULAR

07130M SCALE: 1"=1'-0" (7)

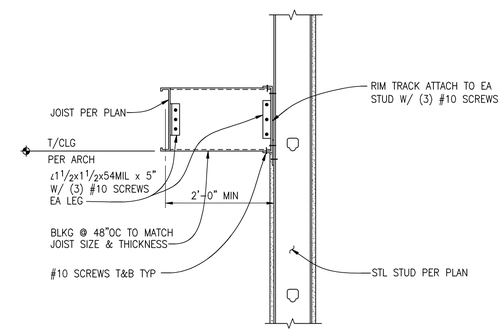

TYPICAL WALL WITH JOISTS PARALLEL

07131M SCALE: 1"=1'-0" (8)

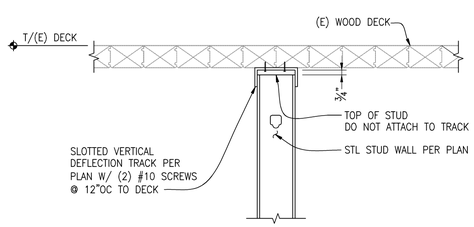

TYPICAL INTERIOR FULL HEIGHT WALL TO EXISTING DECK WITH DEFLECTION TRACK

SCALE: 1"=1'-0" (10)

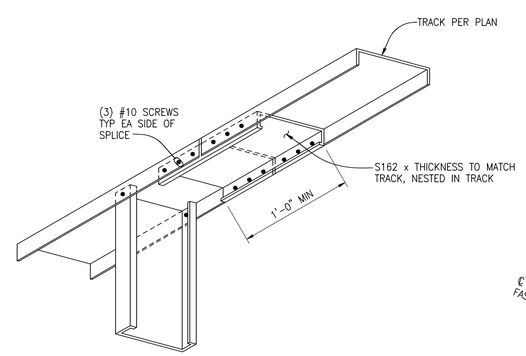

NOTE:

TOP AND BOTTOM TRACK SPLICES SHALL BE STAGGERED 48" MINIMUM.

TYPICAL TRACK SPLICE

07001 SCALE: NONE (11)

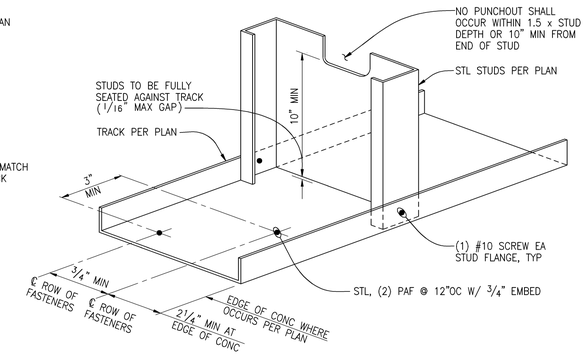

TYPICAL BOTTOM TRACK DETAIL

07000 SCALE: NONE (12)

OWNER:
WILLIAMS-SONOMA, INC.
3250 Van Ness Avenue
San Francisco, CA 94
T 415 616 8602
F 415 439 8164
www.williams-sonomainc

DCI ENGINEERS®
818 STEWART STREET • SUITE 1000
SEATTLE, WASHINGTON 98101
PHONE: (206) 332-1800 • FAX: (206) 332-1600
WEBSITE: www.dciengineers.com
CIVIL / STRUCTURAL

© Copyright 11/2016 D'Avanzo Conversano, Inc. All Rights Reserved
This document, and the ideas and designs incorporated herein, as an instrument of professional service, is the property of D'Avanzo Conversano Inc. Alterations are not permitted without the written consent of D'Avanzo Conversano Inc. Alterations are the responsibility of others.

STATE OF MAINE — TROY A. BEALS — No. 11464 — LICENSED PROFESSIONAL ENGINEER

Reviewed for Code Compliance
Portland, Maine
Date: 04/26/17

CALLISON
AN ARCADIS COMPANY
CALLISON, LLC
www.callison.com

west elm
Downtown Portland
164 Middle Street
Portland, ME 04101
PROJECT #006-160335.00

ISSUED / REVISED	DATE
QA SET	11/11/16
LL/PERMIT SET	11/17/16

STRUCTURAL DETAILS

S-301