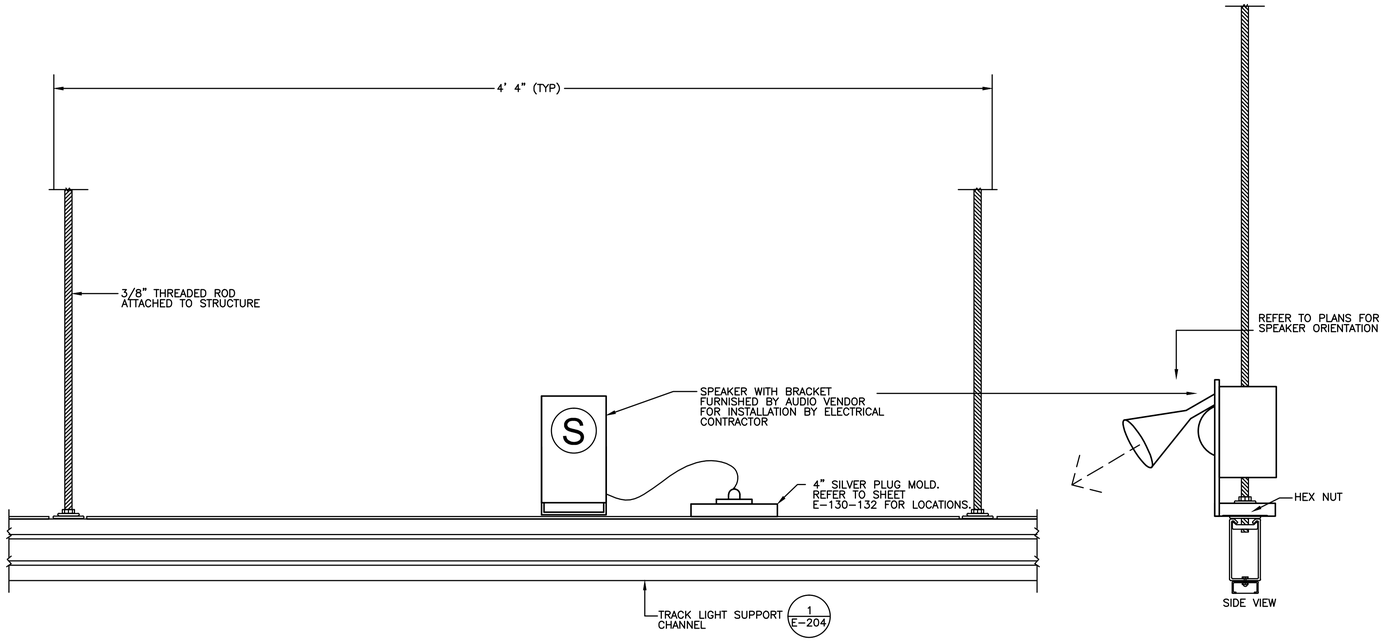

TYPICAL SPEAKER DETAIL

1
NOT TO SCALE

ELECTRICAL CONTRACTOR SHALL PROVIDE ALL SUPPORT HARDWARE FOR MOUNTING SUBWOOFER

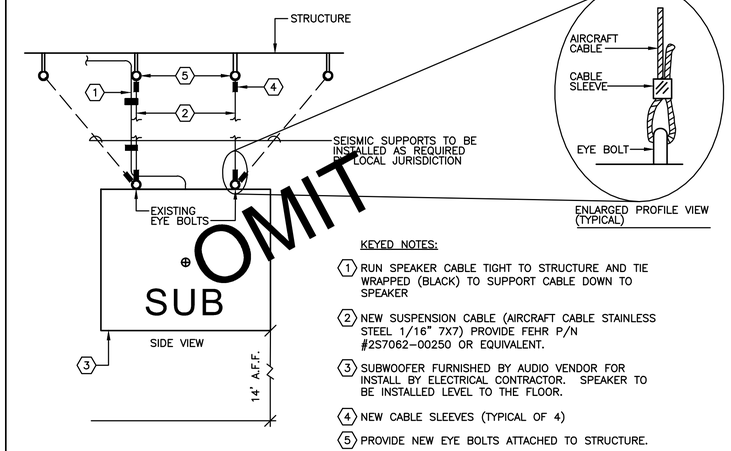

OMIT

KEYED NOTES:

1. RUN SPEAKER CABLE TIGHT TO STRUCTURE AND TIE WRAPPED (BLACK) TO SUPPORT CABLE DOWN TO SPEAKER
2. NEW SUSPENSION CABLE (AIRCRAFT CABLE STAINLESS STEEL 1/16" 7X7) PROVIDE FEHR P/N #2S7062-00250 OR EQUIVALENT.
3. SUBWOOFER FURNISHED BY AUDIO VENDOR FOR INSTALL BY ELECTRICAL CONTRACTOR. SPEAKER TO BE INSTALLED LEVEL TO THE FLOOR.
4. NEW CABLE SLEEVES (TYPICAL OF 4)
5. PROVIDE NEW EYE BOLTS ATTACHED TO STRUCTURE.

TYPICAL SUBWOOFER DETAIL

2
NOT TO SCALE

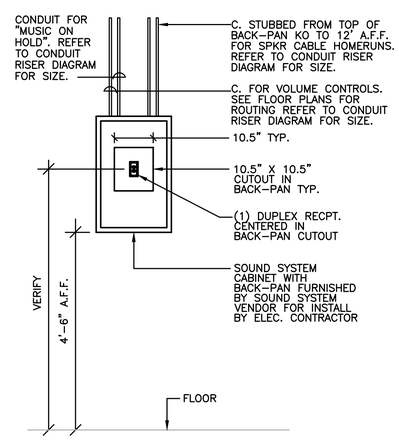

DETAIL NOTES:

1. ALL RECEPTACLES SHALL BE FLUSH MOUNTED.
2. PRIOR TO ROUGH-IN CONTR. SHALL CONFIRM RACK DIMENSIONS AND LOCATION OF CUT-OUTS TO ENSURE OUTLETS ARE CENTERED IN CUT-OUTS.
3. RACKS SHALL BE MOUNTED RIGHT WAY UP, HINGED FROM LEFT TO RIGHT.

SOUND SYSTEM CABINET ELEVATION

4
NOT TO SCALE

IN SALES ARE BATTERY PACKS FOR EXIT AND EMERGENCY LIGHTS MUST BE REMOTE OR RECESSED. PAINT EXPOSED SURFACES TO MATCH ADJACENT FINISH. TENANT ENGINEER IS TO COORDINATE FIXTURE SPECIFICATION.

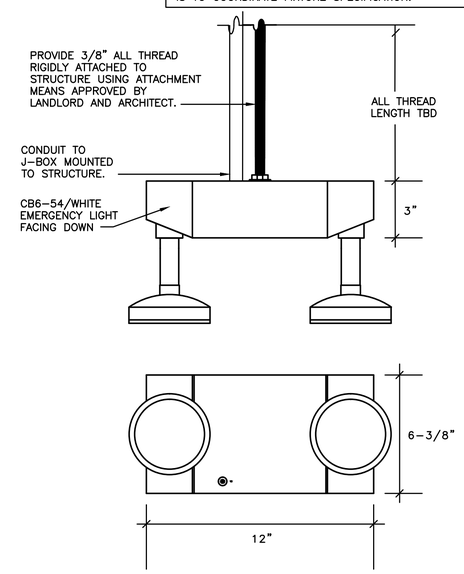

EMERGENCY LIGHT SUPPORT

6
NOT TO SCALE

OWNER:
WILLIAMS-SONOMA, INC.
3250 Van Ness Avenue
San Francisco, CA 94109
T 415 616 8602
F 415 439 8164
www.williams-sonomainc.com

EEA
EEA Consulting Engineers
6615 Vaught Ranch Road, Suite 200
Austin, Texas 78730-2314 USA
512.744.4400 main 512.744.4444 fax
www.eeace.com

State of Registration MAINE
Firm Registration No. N/A
EEA Project No. 20166538

DRAWN BY: BMW
CHECKED BY: SMR

Digitally Signed
STATE OF MAINE
Michael N. Hart
No. 10507
LICENSED PROFESSIONAL ENGINEER
Michael N Hart, PE (ME)
2017.03.08 15:33:30-06'00'

west elm
Dowtown Portland
164 Middle Street
Portland, ME 04101
PROJECT #006-160335.00

ISSUED / REVISED	DATE
PRELIMINARY SET	09/08/16
LL COORDINATION SET	11/08/16
LL/PERMIT SET	11/21/16

ELECTRICAL DETAILS

E-205