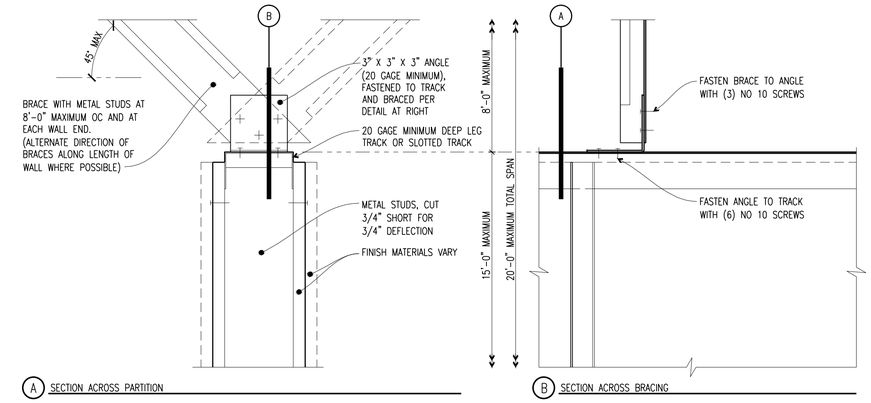

(A) SECTION ACROSS PARTITION

(B) SECTION ACROSS BRACING

E7 TOP OF PARTITION WHERE BRACED TO STRUCTURE ABOVE – SEISMIC DESIGN CATEGORY A AND B

3"=1'-0"

C1010FP-52

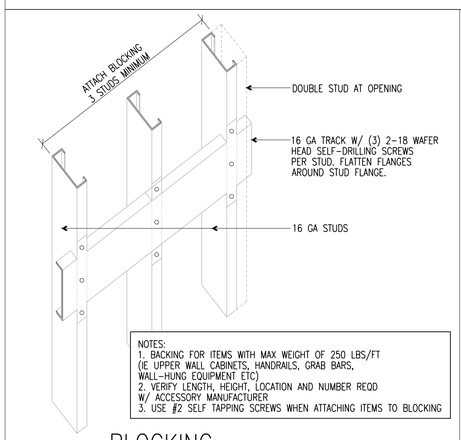

NOTES:
1. BACKING FOR ITEMS WITH MAX WEIGHT OF 250 LBS/FT (IE UPPER WALL CABINETS, HANDRAILS, GRAB BARS, WALL-HUNG EQUIPMENT ETC)
2. VERIFY LENGTH, HEIGHT, LOCATION AND NUMBER REQD W/ ACCESSORY MANUFACTURER
3. USE #2 SELF TAPPING SCREWS WHEN ATTACHING ITEMS TO BLOCKING

C7 BLOCKING ATTACHMENT – HEAVY DUTY

NTS

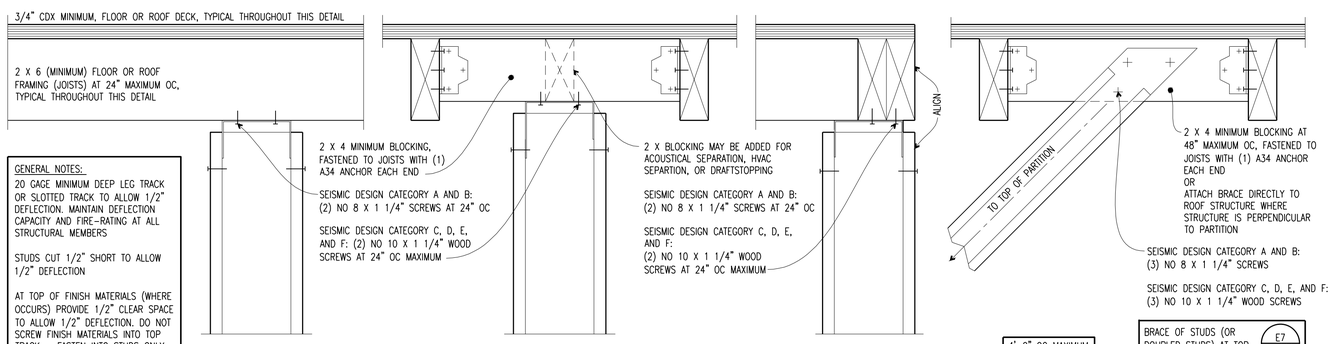

GENERAL NOTES:
20 GAGE MINIMUM DEEP LEG TRACK OR SLOTTED TRACK TO ALLOW 1/2" DEFLECTION. MAINTAIN DEFLECTION CAPACITY AND FIRE-RATING AT ALL STRUCTURAL MEMBERS

STUDS CUT 1/2" SHORT TO ALLOW 1/2" DEFLECTION

AT TOP OF FINISH MATERIALS (WHERE OCCURS) PROVIDE 1/2" CLEAR SPACE TO ALLOW 1/2" DEFLECTION. DO NOT SCREW FINISH MATERIALS INTO TOP TRACK – FASTEN INTO STUDS ONLY

(A) PARTITION PERPENDICULAR TO JOISTS (B) PARTITION PARALLEL TO JOISTS (C) PARTITION LOCATED AT DECK EDGE/OPENING (D) PARTITION BRACE TO STRUCTURE

A1 INTERSECTION OF NON-RATED METAL-STUD PARTITIONS WITH SOLID-LUMBER STRUCTURE AND PLYWOOD DECK ABOVE

3"=1'-0"

C1010FP-26

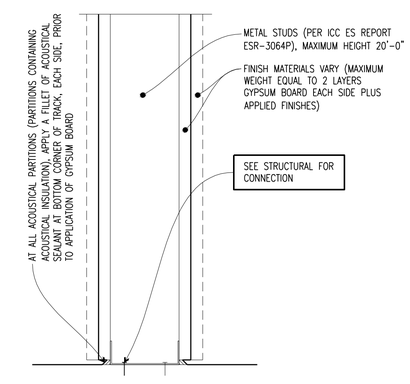

A9 PARTITION-TO-FLOOR CONNECTION

3"=1'-0"

C1010FP-02-MOD

OWNER:
WILLIAMS-SONOMA, INC.
3250 Van Ness Avenue
San Francisco, CA 94109
T 415 616 8602
F 415 439 8164
www.williams-sonomainc.com

LICENSED ARCHITECT TODD K. ITAOKI 3-4417 STATE OF MAINE

CALLISONRTKL™
A DESIGN CONSULTANCY OF ARCADIS
CALLISONRTKL, INC.
www.callisonrtkl.com

west elm
Dowtown Portland
164 Middle Street
Portland, ME 04101
PROJECT #006-160335.00

ISSUED / REVISED	DATE
PRELIMINARY SET	09/08/16
LL COORDINATION SET	11/08/16
LL/PERMIT SET	11/21/16

WALL DETAILS

A-802

COPYRIGHT © 2016 CallisonRTKL Inc.