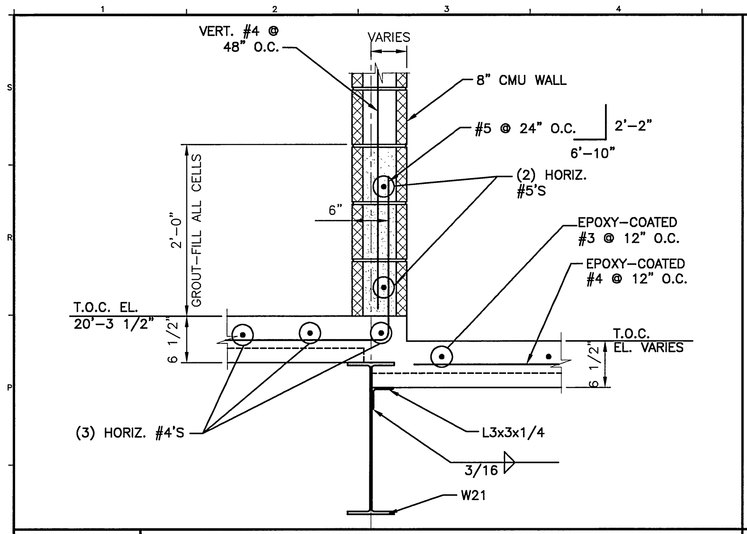

N1	SECTION
1"=1'-0"	

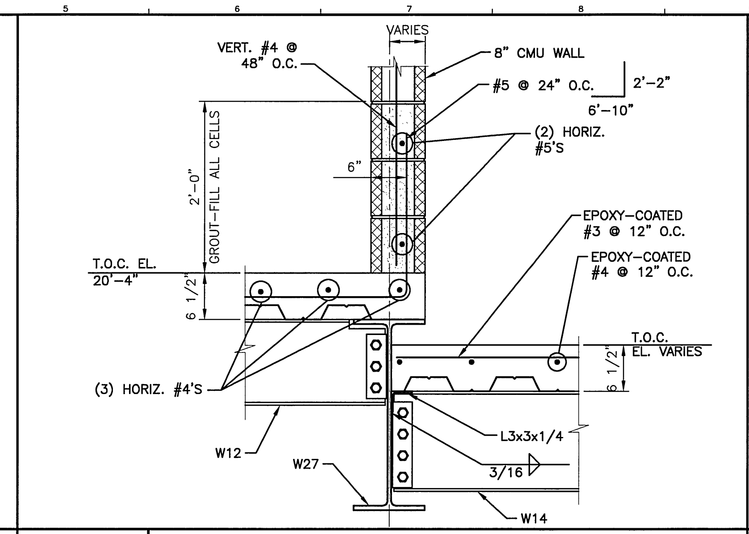

N5	SECTION
1"=1'-0"	

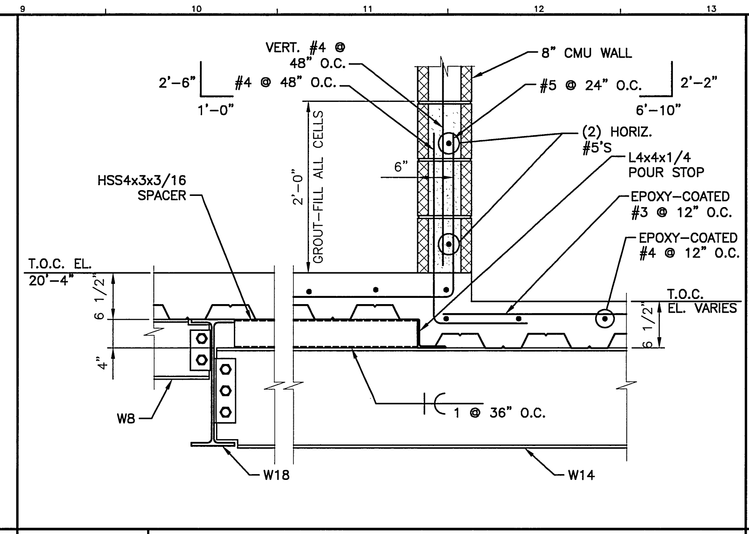

N9	SECTION
1"=1'-0"	

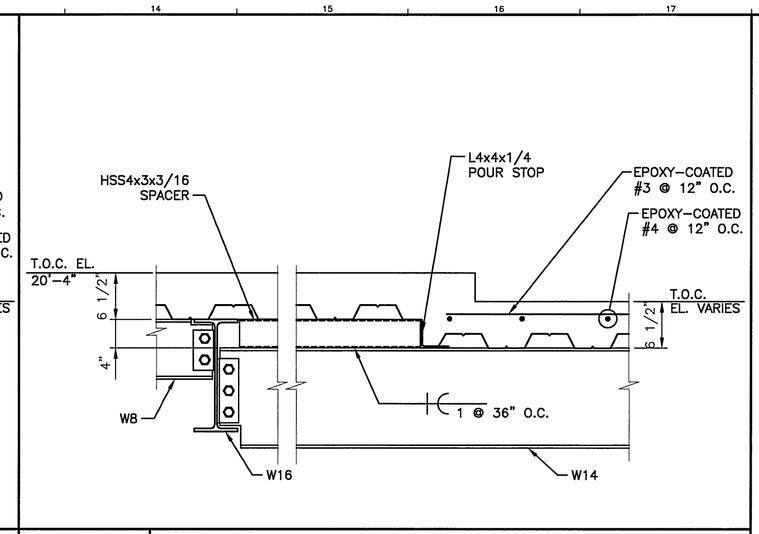

N14	SECTION
1"=1'-0"	

NOTE:

1. SEE SG001 FOR STRUCTURAL GENERAL NOTES.

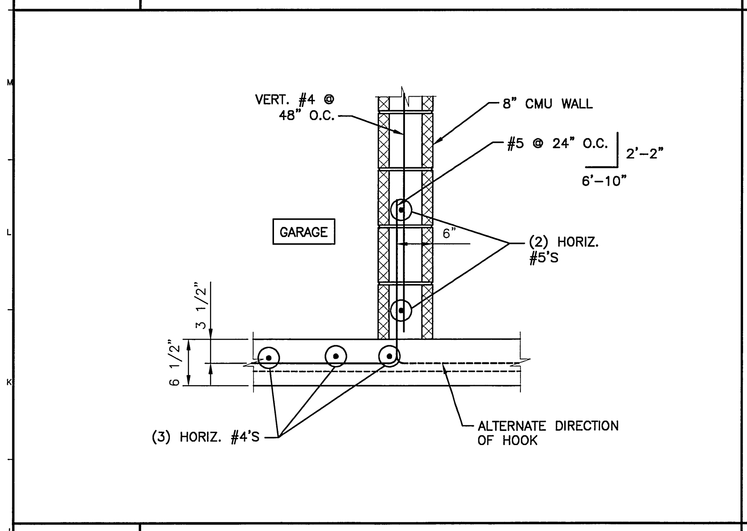

J1	SECTION
1"=1'-0"	

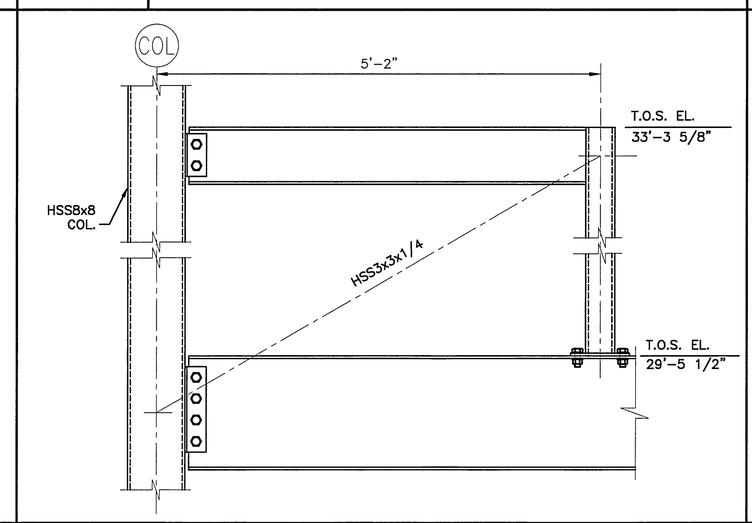

J5	SECTION
1"=1'-0"	

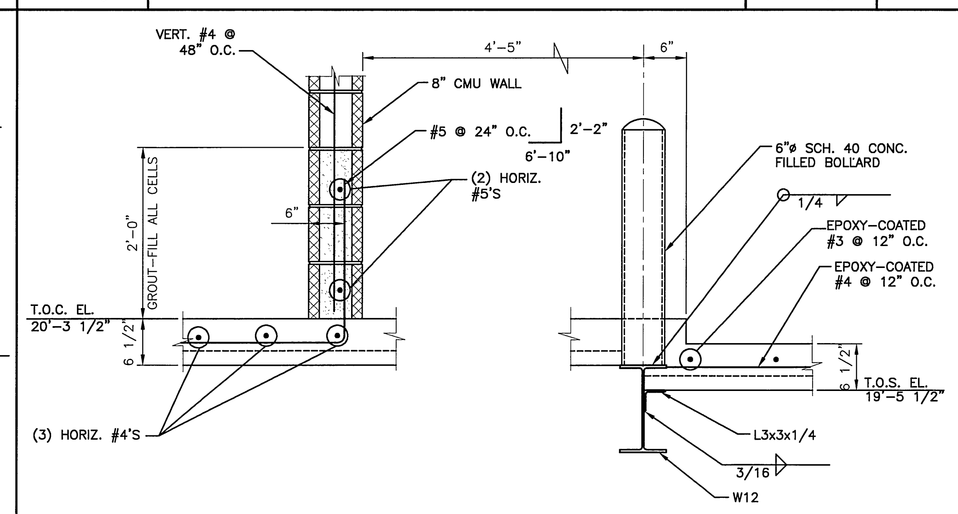

J9	SECTION
1"=1'-0"	

J14	–
–	

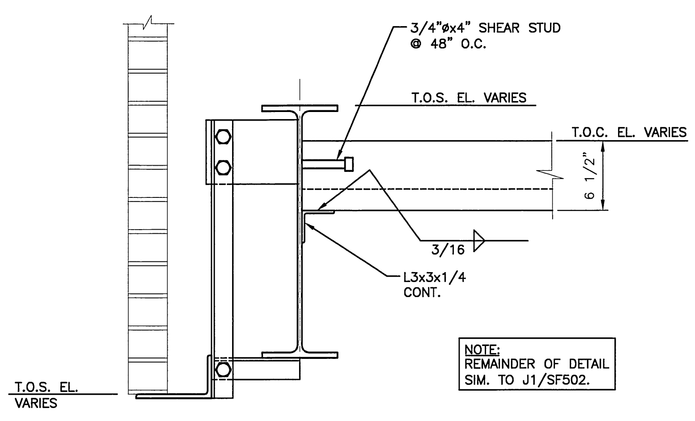

E1	SECTION
1 1/2"=1'-0"	

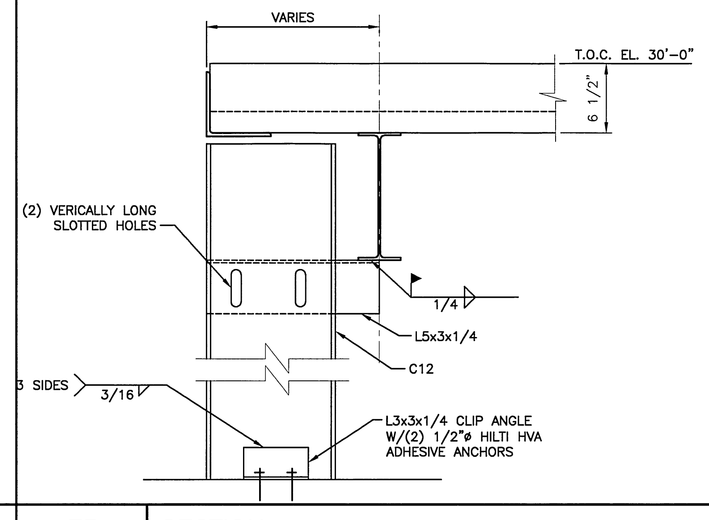

E5	SECTION
1 1/2"=1'-0"	

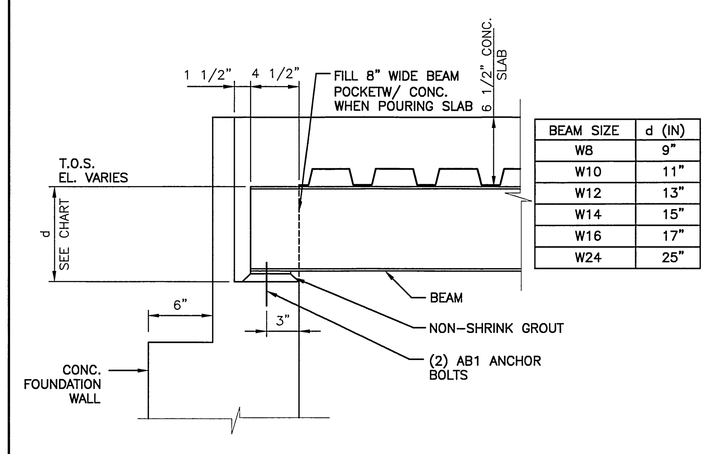

BEAM SIZE	d (IN)
W8	9"
W10	11"
W12	13"
W14	15"
W16	17"
W24	25"

E9	SECTION
1 1/2"=1'-0"	

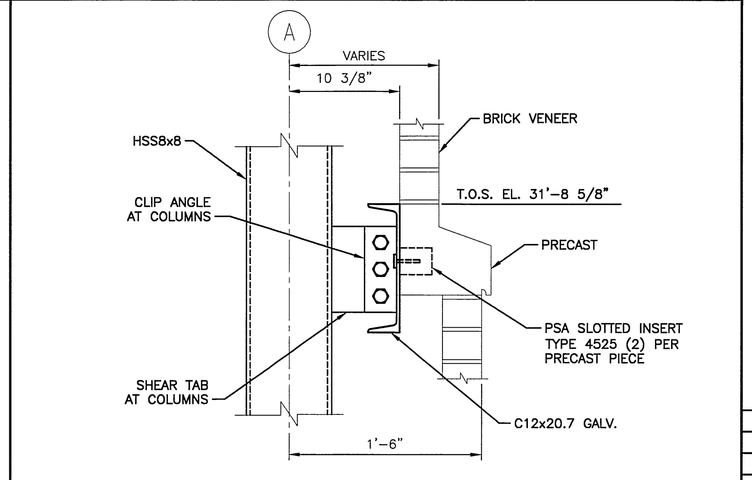

E14	SECTION
1 1/2"=1'-0"	

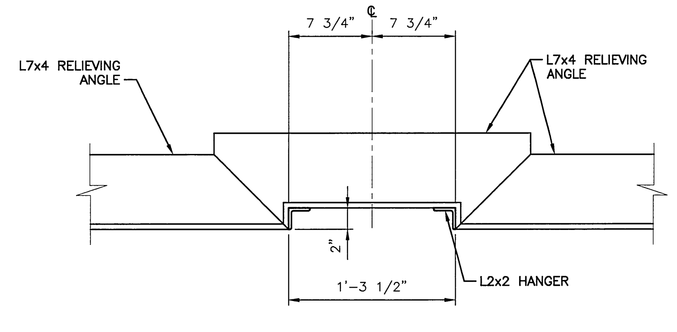

A1	DETAIL
1 1/2"=1'-0"	

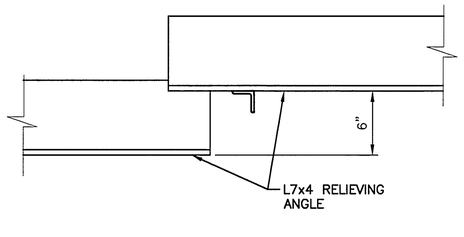

A5	DETAIL
1 1/2"=1'-0"	

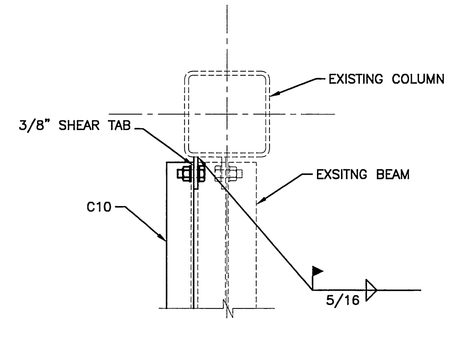

A9	DETAIL
1 1/2"=1'-0"	

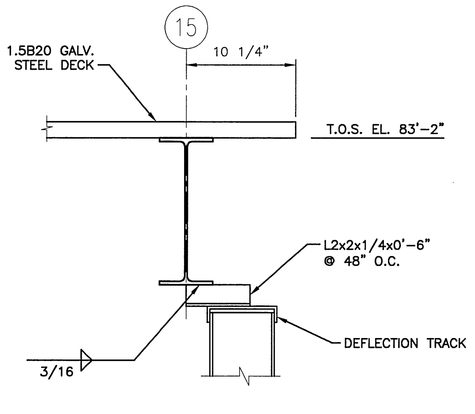

A14	SECTION
1 1/2"=1'-0"	

REV.	DESCRIPTION	DATE
0	ISSUED FOR CONSTRUCTION	12-15-03

ISSUED FOR CONSTRUCTION
12-15-03

CURRENT ISSUE STATUS:

STATE OF MAINE — Richard J. Lux — No. 3709 — REGISTERED PROFESSIONAL ENGINEER — 12-15-03

SMRT

ARCHITECTURE ENGINEERING PLANNING

SMRT
144 Fore Street/P.O. Box 618
Portland, Maine 04104

tel. (207) 772-3846
fax. (207) 772-1070

PROJECT: FORE STREET OFFICE BUILDING, PORTLAND, MAINE

SHEET TITLE: FRAMING SECTIONS AND DETAILS

SCALE:	AS NOTED	DATE:	12-15-03
PROJECT MANAGER:	JLJ	GRAPHIC SCALE:	0" 1"
JOB CAP/DRAWN:	RJL/JSG		
A/E OF RECORD:	JLJ	SHEET No.	SF503
SMRT CAD FILE:	SF503-03087		
PROJECT No.	03087		

© COPYRIGHT 2003 SMRT INC.