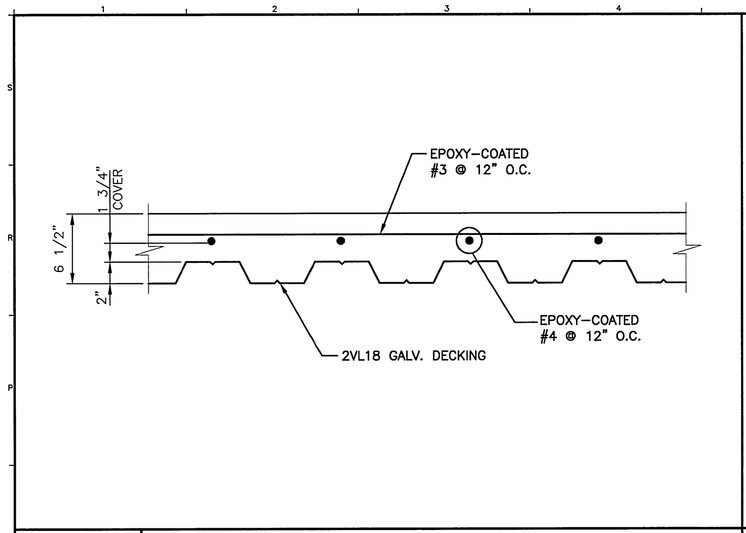

N1	FIRST FLOOR SLAB SECTION
1 1/2"=1'-0"	

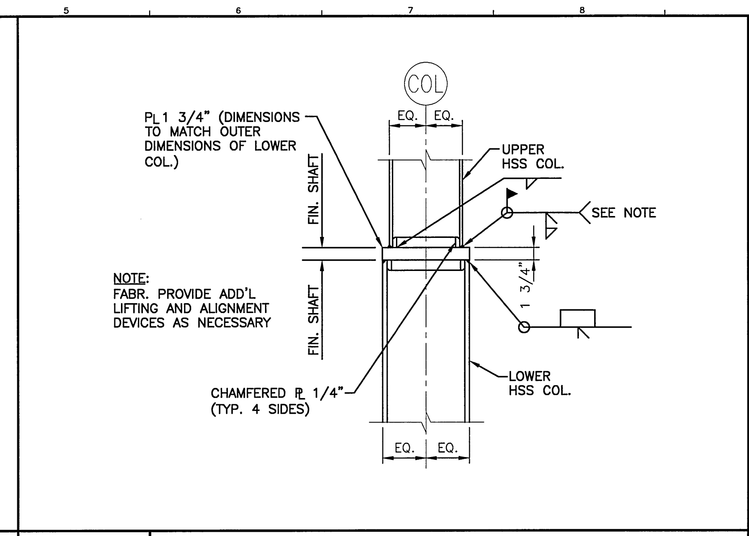

N5	DETAIL
1"=1'-0"	

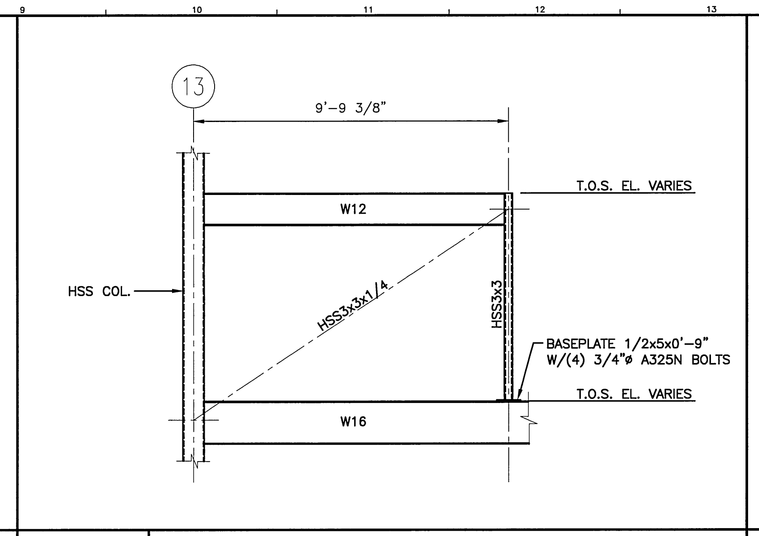

N9	SECTION
3/8"=1'-0"	

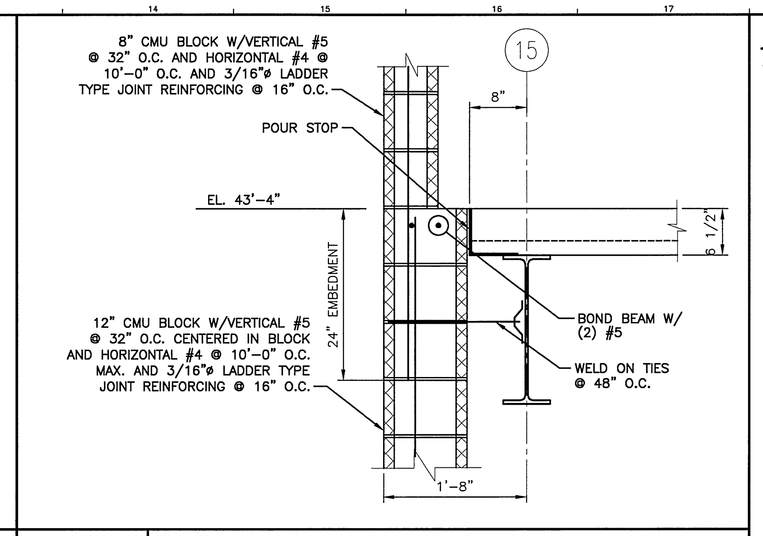

N14	SECTION
1"=1'-0"	

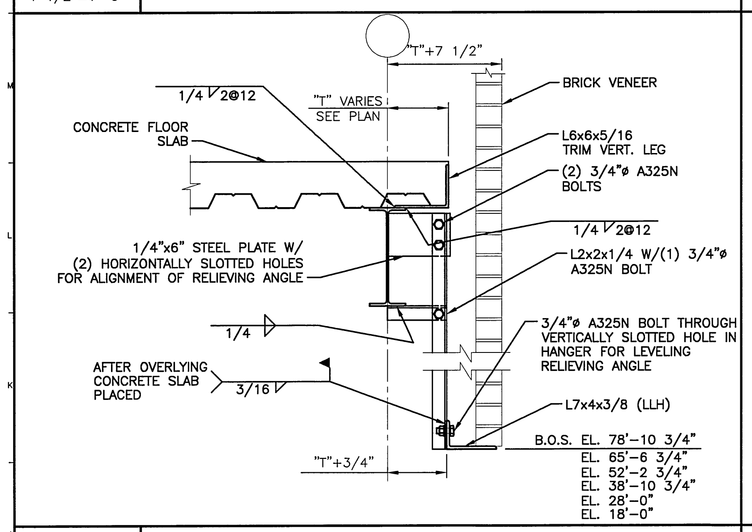

J1	SECTION
1"=1'-0"	

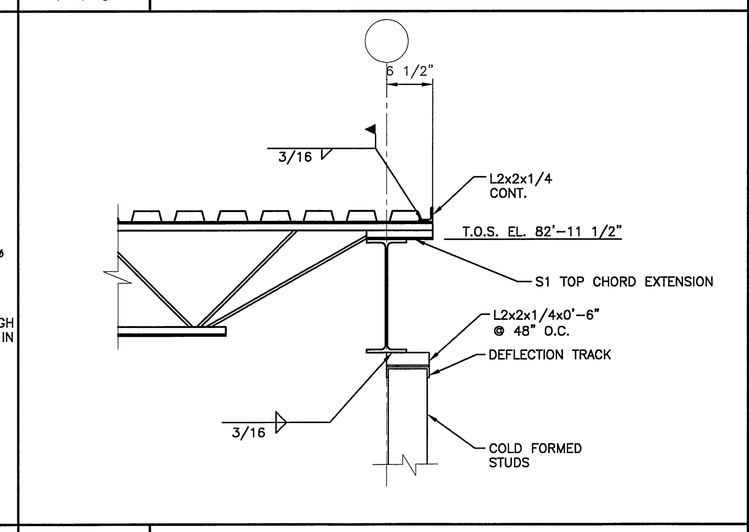

J5	SECTION
1"=1'-0"	

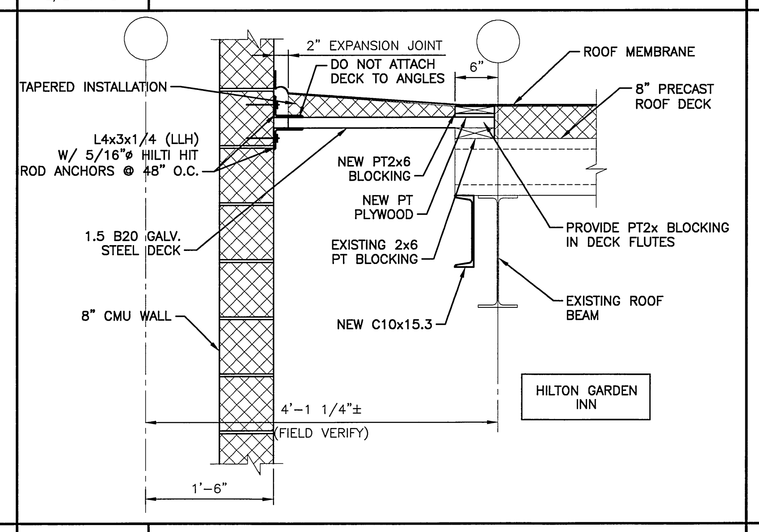

J9	SECTION
1"=1'-0"	

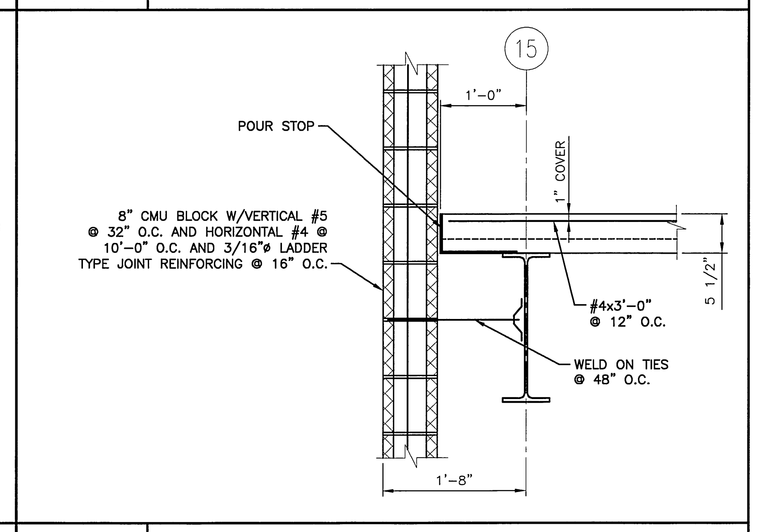

J14	SECTION
1"=1'-0"	

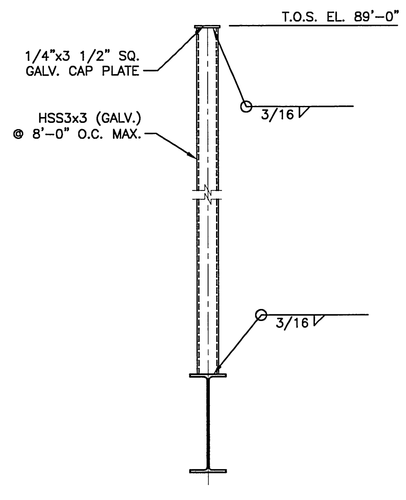

E1	SECTION
1"=1'-0"	

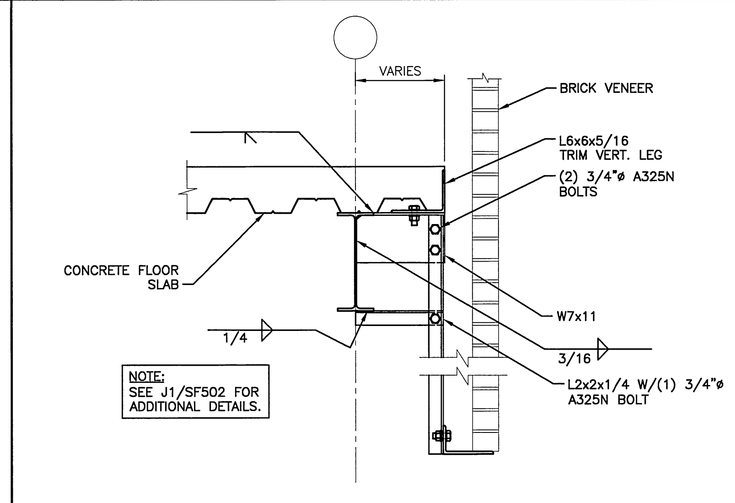

E5	SECTION
1"=1'-0"	

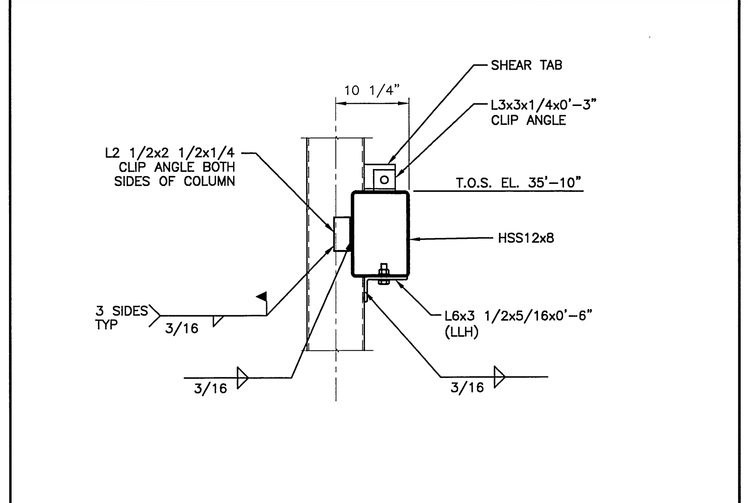

E9	SECTION
1"=1'-0"	

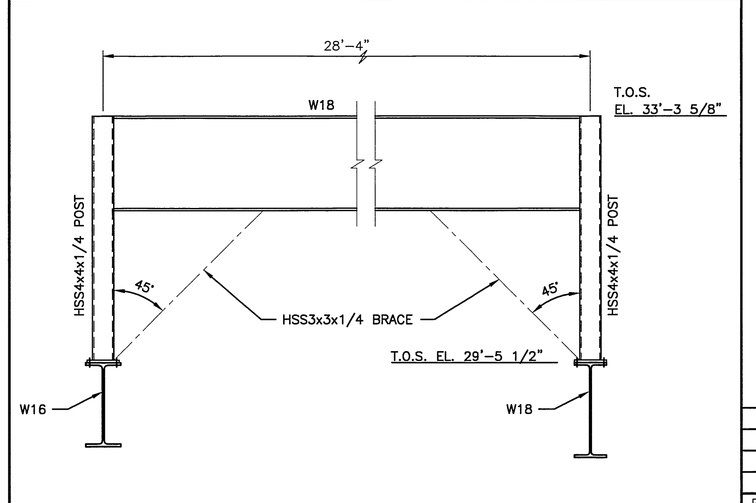

E14	ELEVATION
3/4"=1'-0"	

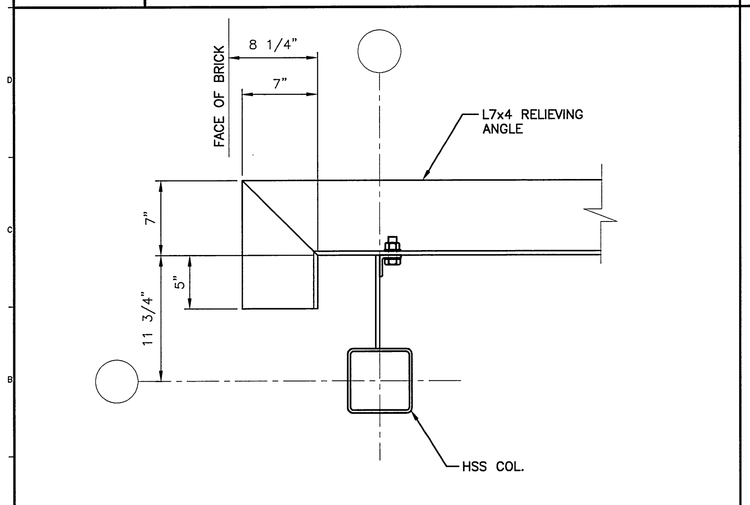

A1	DETAIL
1 1/2"=1'-0"	

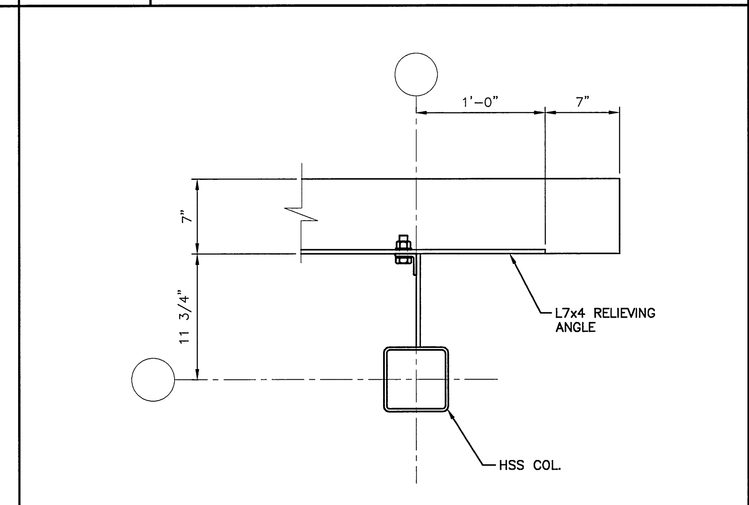

A5	DETAIL
1 1/2"=1'-0"	

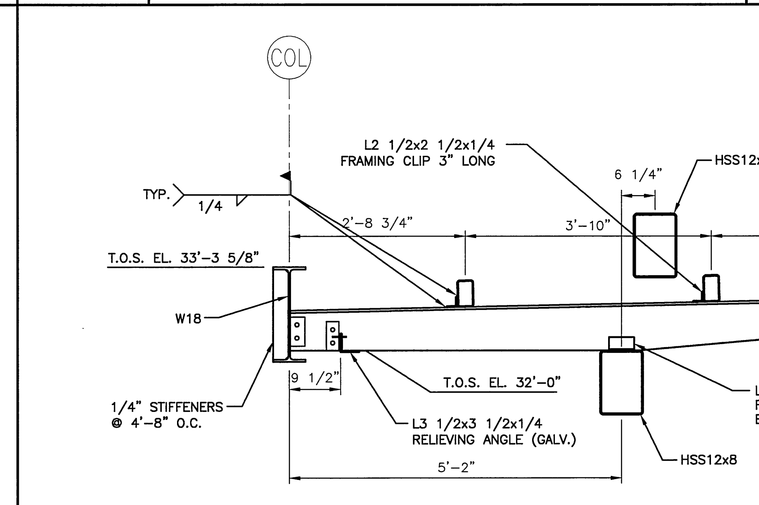

A9	SECTION
3/4"=1'-0"	

NOTE:

1. SEE SG001 FOR STRUCTURAL GENERAL NOTES.

REV.	DESCRIPTION	DATE
0	ISSUED FOR CONSTRUCTION	12-15-03

ISSUED FOR CONSTRUCTION
12-15-03

CURRENT ISSUE STATUS:

STATE OF MAINE JOHN L. JENNER NO. 5705 REGISTERED PROFESSIONAL ENGINEER
12-15-03

SMRT

ARCHITECTURE ENGINEERING PLANNING

SMRT
144 Fore Street/P.O. Box 618
Portland, Maine 04104
tel. (207) 772-3846
fax. (207) 772-1070

PROJECT:
FORE STREET
OFFICE BUILDING
PORTLAND, MAINE

SHEET TITLE:
FRAMING
SECTIONS AND DETAILS

SCALE:	AS NOTED	DATE:	12-15-03
PROJECT MANAGER:	JLJ	GRAPHIC SCALE:	0" 1"
JOB CAP/DRAWN:	RJL/JSG		
A/E OF RECORD:	JLJ	SHEET No.	SF502
SMRT CAD FILE:	SF502-03087		
PROJECT No.	03087		

© COPYRIGHT 2003 SMRT INC.