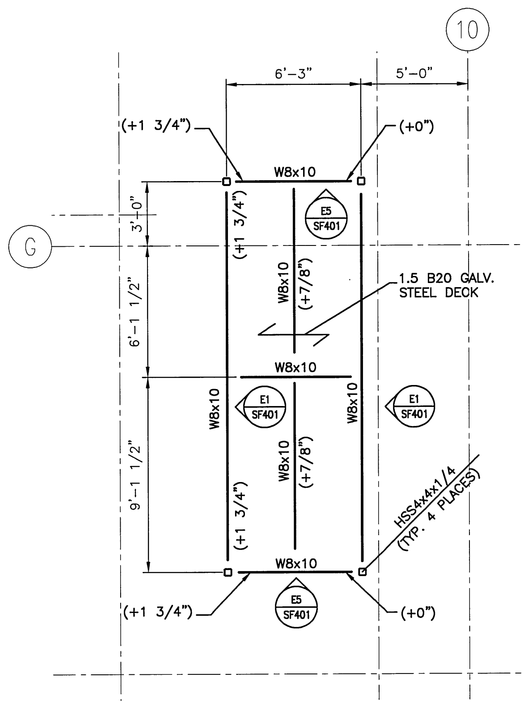


## J1 — ELEVATOR PENTHOUSE ROOF T.O.S. EL. 88'-8" U.N.O.

1/4"=1'-0"

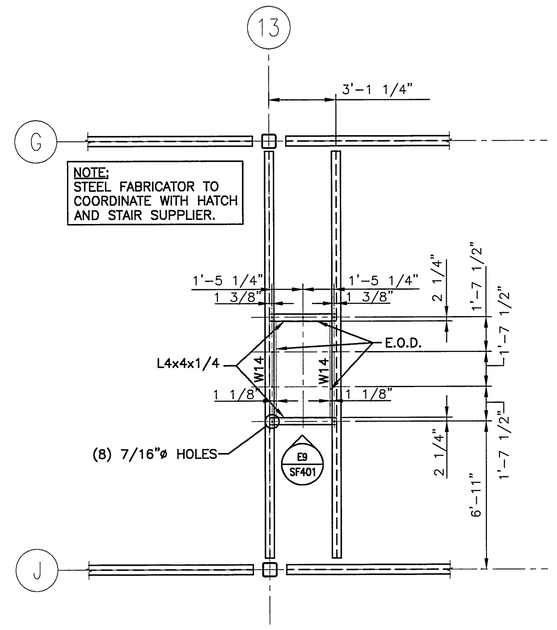


NOTE:
STEEL FABRICATOR TO COORDINATE WITH HATCH AND STAIR SUPPLIER.

## J5 — PARTIAL PLAN

1/4"=1'-0"

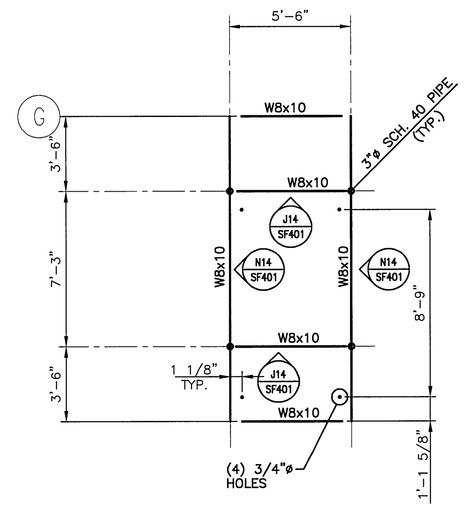


NOTES:
1. (4) REQUIRED.
2. TOP OF STEEL ELEVATION 85'-8"
3. COORDINATE ALL DIMENSIONS WITH MECHANICAL CONTRACTOR PRIOR TO FABRICATION.

## J9 — MECHANICAL UNIT FRAME FRAMING PLAN

1/4"=1'-0"

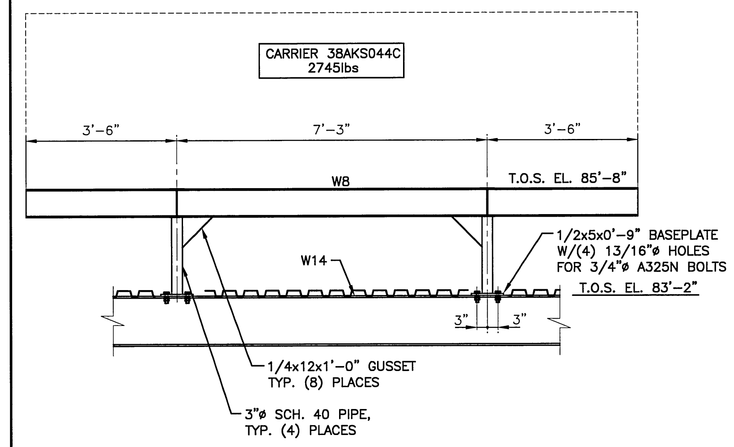


## N14 — ELEVATION

1/2"=1'-0"

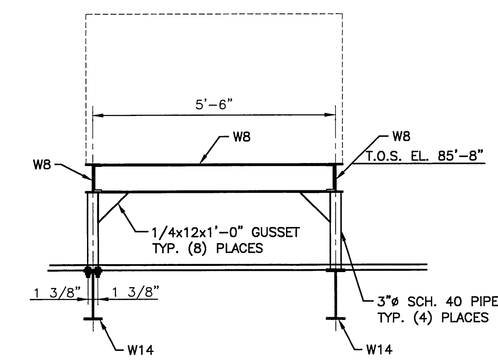


## J14 — ELEVATION

1/2"=1'-0"

NOTE:
1. SEE SG001 FOR STRUCTURAL GENERAL NOTES.
2. SEE SF501 FOR TYPICAL SECTIONS AND DETAILS.

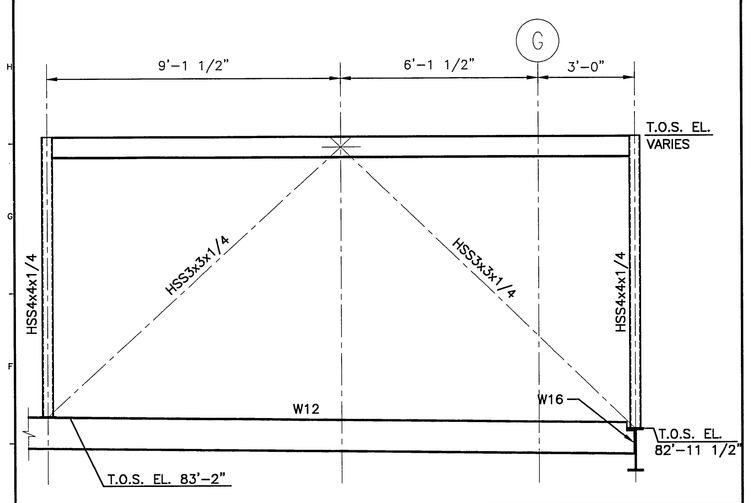


## E1 — ELEVATION

3/8"=1'-0"

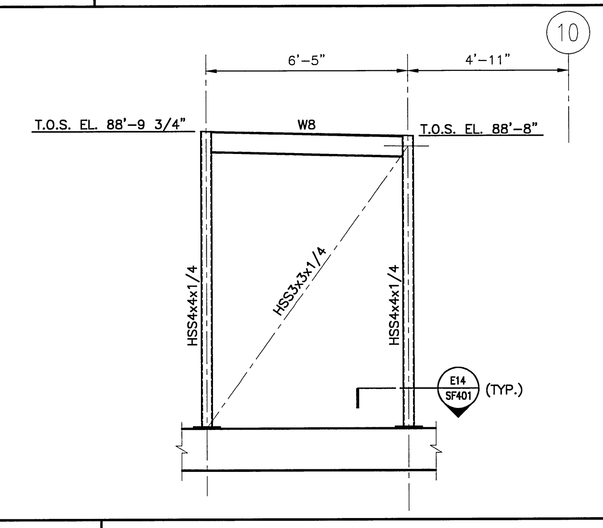


## E5 — ELEVATION

3/8"=1'-0"

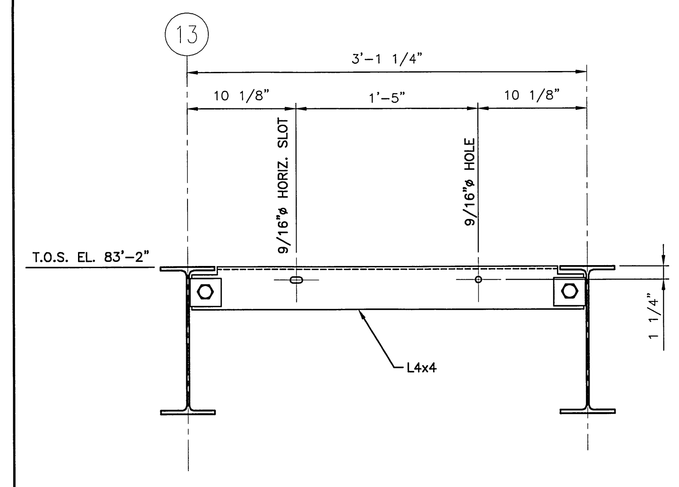


## E9 — ELEVATION

1 1/2"=1'-0"

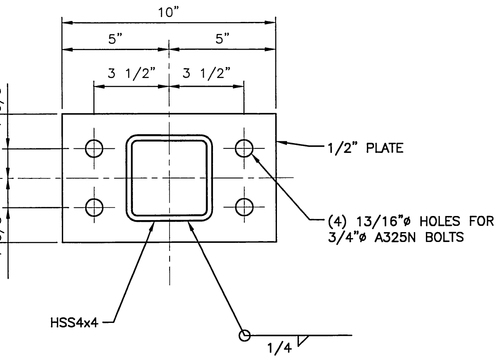


## E14 — SECTION

3"=1'-0"

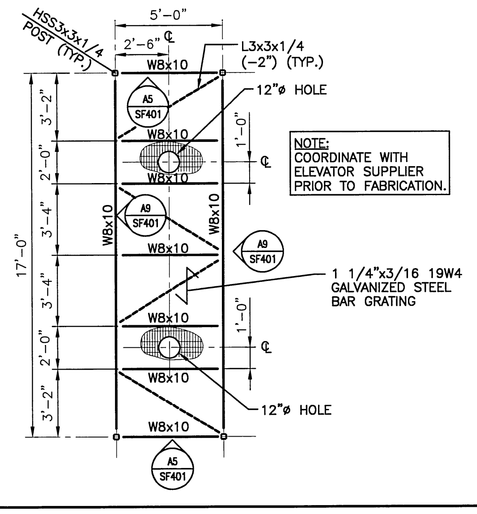


NOTE:
COORDINATE WITH ELEVATOR SUPPLIER PRIOR TO FABRICATION.

## A1 — ELEVATOR PIT PLATFORM

1/4"=1'-0"

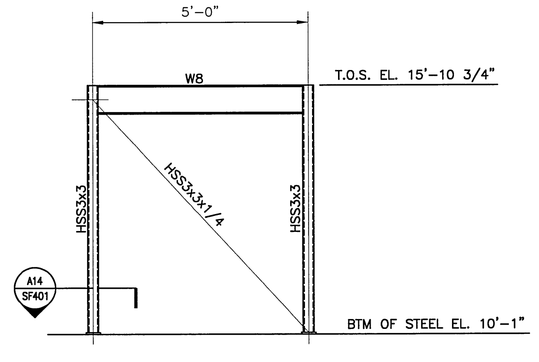


## A5 — ELEVATION

1/2"=1'-0"

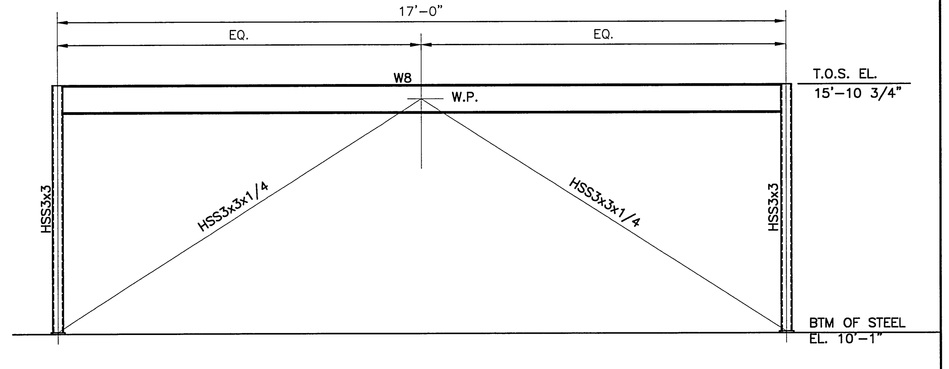


## A9 — ELEVATION

1/2"=1'-0"

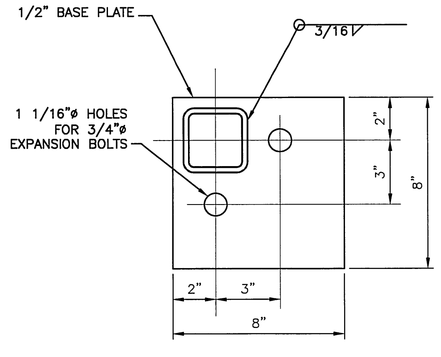


## A14 — SECTION

3"=1'-0"

| REV. | DESCRIPTION | DATE |
|---|---|---|
| 0 | ISSUED FOR CONSTRUCTION | 12-15-03 |

**ISSUED FOR CONSTRUCTION**
**12-15-03**

CURRENT ISSUE STATUS:

PROJECT NORTH

STATE OF MAINE — Scott Walker — REGISTERED PROFESSIONAL ENGINEER — No. 6705 — 12/15/03


SMRT

ARCHITECTURE ENGINEERING PLANNING

SMRT
144 Fore Street/P.O. Box 618
Portland, Maine 04104
tel. (207) 772-3846
fax. (207) 772-1070


PROJECT: FORE STREET OFFICE BUILDING, PORTLAND, MAINE

SHEET TITLE: PARTIAL FRAMING PLANS

| | | | |
|---|---|---|---|
| SCALE: | AS NOTED | DATE: | 12-15-03 |
| PROJECT MANAGER: | JLJ | GRAPHIC SCALE: | 0" 1" |
| JOB CAP/DRAWN: | RJL/JSG | | |
| A/E OF RECORD: | JLJ | SHEET No. | SF401 |
| SMRT CAD FILE: | SF401-03087 | | |
| PROJECT No. | 03087 | | |

© COPYRIGHT 2003 SMRT INC.