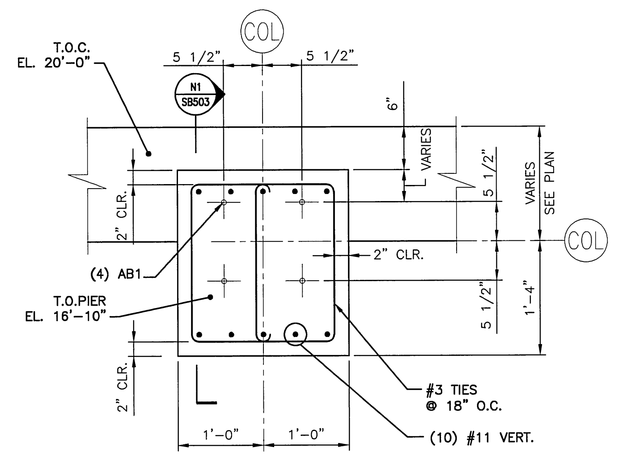

N1	PIER TYPE – P1
1"=1'-0"	

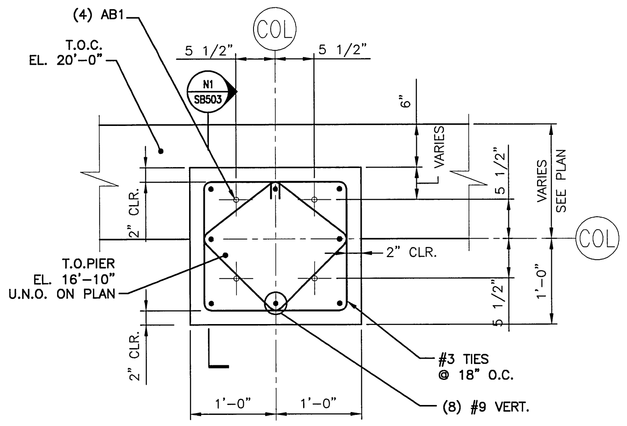

N5	PIER TYPE – P2
1"=1'-0"	

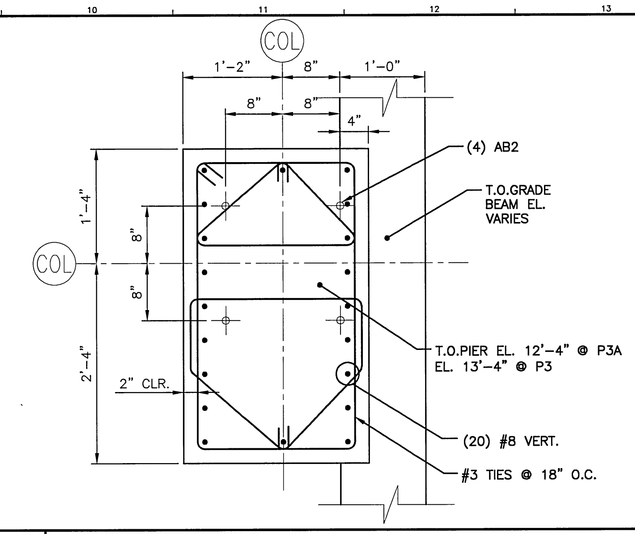

N9	PIER TYPE – P3
1"=1'-0"	

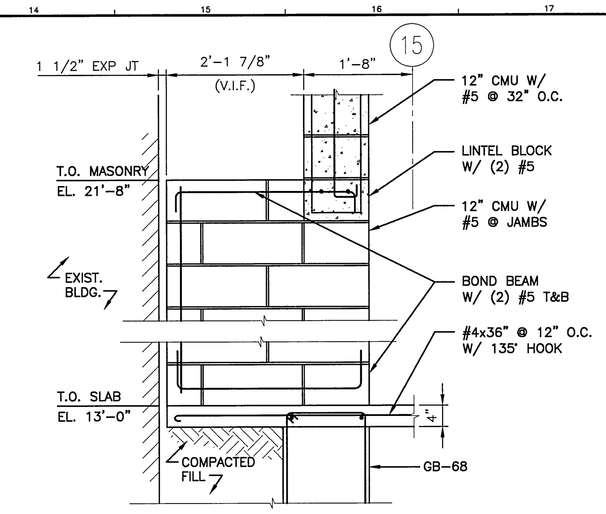

N14	SECTION
3/4"=1'-0"	

NOTE:

1. SEE SG001 FOR STRUCTURAL GENERAL NOTES.

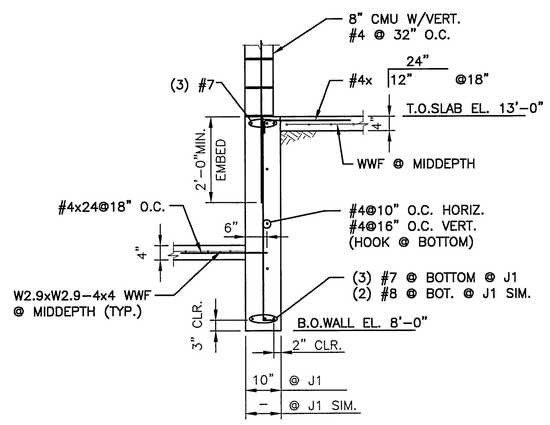

J1	SECTION
1/2"=1'-0"	

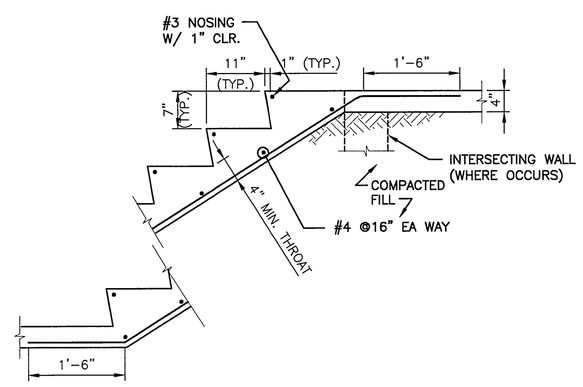

J5	TYP. CONCRETE STAIR
3/4"=1'-0"	

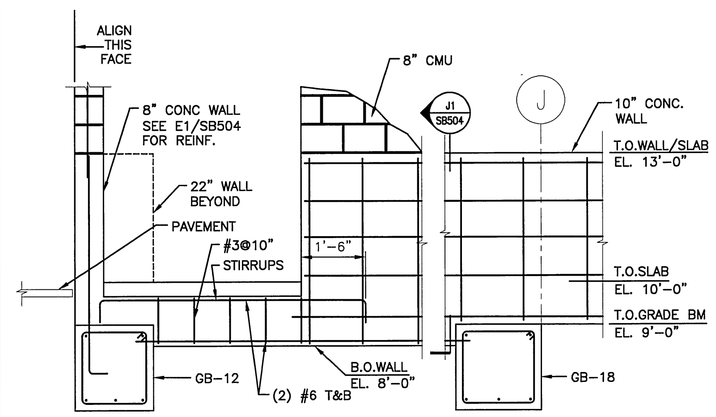

J9	SECTION/ELEVATION
1/2"=1'-0"	

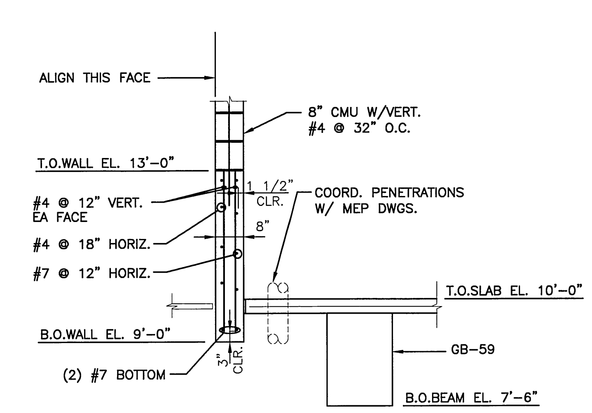

J14	SECTION
1/2"=1'-0"	

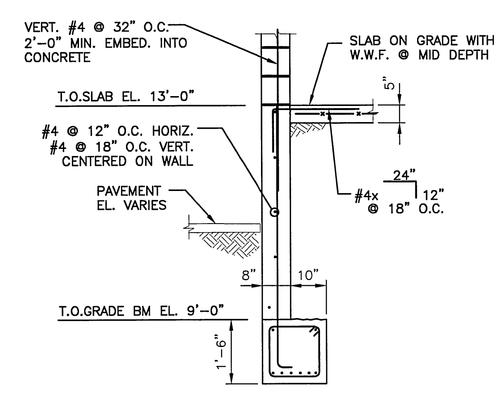

E1	SECTION
1/2"=1'-0"	

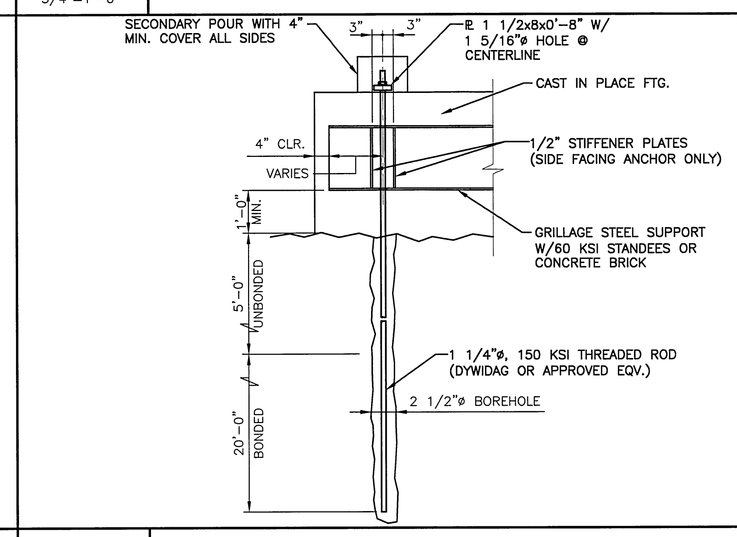

E5	TYPICAL ROCK ANCHOR DETAIL
1/2"=1'-0"	

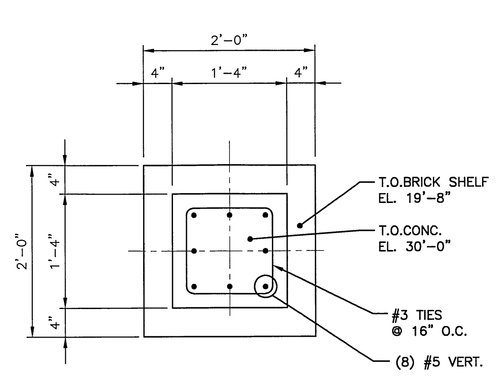

E9	PIER TYPE – P5
1"=1'-0"	

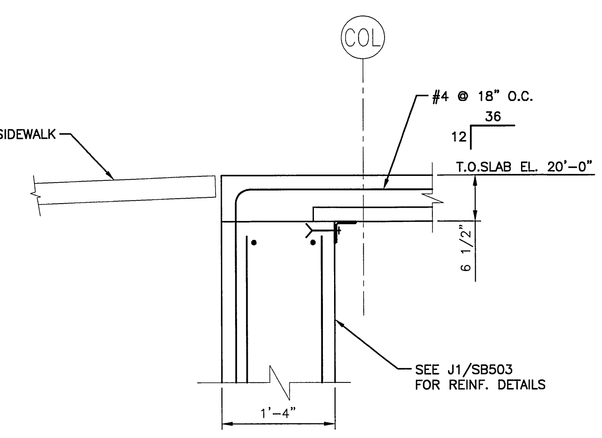

E14	SECTION
1"=1'-0"	

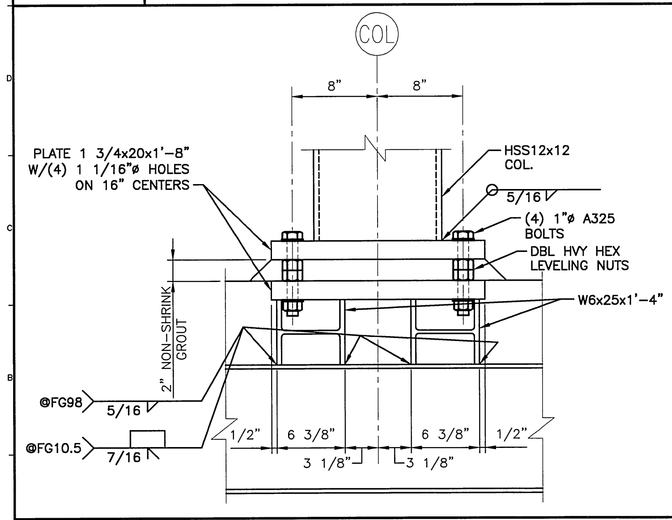

A1	TYP. BASEPLATE CONNECTION @ GRILLAGE FOUNDATIONS
1 1/2"=1'-0"	

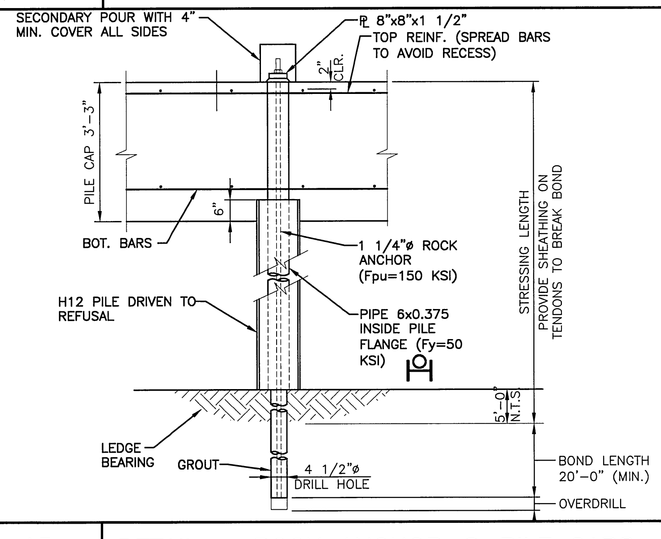

A5	DETAIL – ROCK ANCHOR @ PILE CAPS
1/2"=1'-0"	

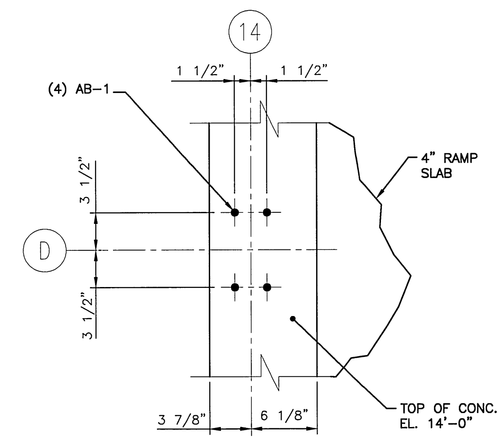

A9	DETAIL
1 1/2"=1'-0"	

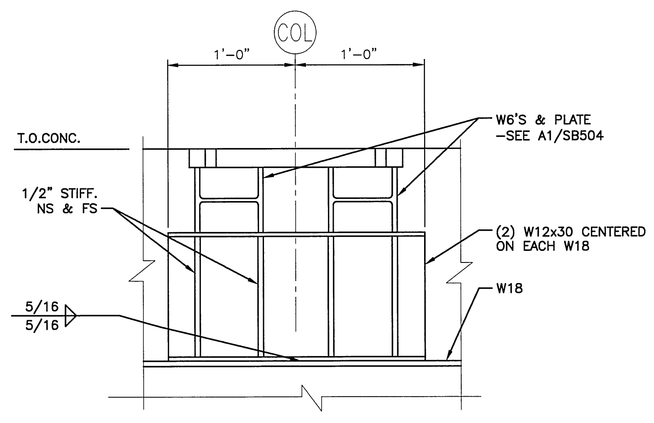

A14	SECTION
1 1/2"=1'-0"	

REV.	DESCRIPTION	DATE
0	ISSUED FOR CONSTRUCTION	12-15-03

ISSUED FOR CONSTRUCTION
12-15-03

CURRENT ISSUE STATUS:

STATE OF MAINE
SCOTT R. LEWIS
NO. 5705
12/15/03

SMRT

ARCHITECTURE ENGINEERING PLANNING

SMRT
144 Fore Street/P.O. Box 618
Portland, Maine 04104
tel. (207) 772-3846
fax. (207) 772-1070

PROJECT: FORE STREET OFFICE BUILDING
PORTLAND, MAINE

SHEET TITLE: FOUNDATION SECTIONS AND DETAILS

SCALE:	AS NOTED	DATE:	12-15-03
PROJECT MANAGER:	JLJ	GRAPHIC SCALE:	0" 1"
JOB CAP/DRAWN:	RJL/JSG		
A/E OF RECORD:	JLJ	SHEET No.	SB504
SMRT CAD FILE:	SB504-03087		
PROJECT No.	03087		

© COPYRIGHT 2003 SMRT INC.