DOOR SCHEDULE

DOOR NUMBER	DOOR SIZE	DOOR MATERIAL	DOOR ELEVATION	GLAZING	FRAME (SEE DRAWING AE605 FOR DETAILS U.N.O.) MATERIAL	FRAME ELEVATION	FRAME HEAD	FRAME JAMB	FRAME SILL	HWS	FIRE RATING (MIN.)	DOOR NUMBER	REMARKS
001	3'-0" x 7'-0" x 1 3/4"	HM	F	–	HM	3	J3	J6	–	1	45	001	–
002	3'-0" x 7'-0" x 1 3/4"	HM	F	–	HM	3	J3	J6	–	1	90	002	–
007	3'-0" x 7'-0" x 1 3/4"	HM	F	–	HM	3	J3	J6	–	1	45	007	–
009A	3'-0" x 7'-0" x 1 3/4"	HM	NG	WIRE	HM	3	J3	J6	–	9	90	009A	–
009B	3'-0" x 7'-0" x 1 3/4"	INS HM	HG	INS TEMP	HM	3	·	P10	E12	8	–	009B	WEATHERSTRIP
009C	3'-0" x 7'-0" x 1 3/4"	HM	NG	WIRE	HM	1 FV	N5 (SIM)	N8 (SIM)	E12 (SIM)	10	90	009C	F. V. SIZE OF EXIST. OPENING
009D	3'-0" x 7'-0" x 1 3/4"	HM	NG	WIRE	HM	1 FV	N5 (SIM)	N8 (SIM)	E12 (SIM)	10	90	009D	F. V. SIZE OF EXIST. OPENING
010A	3'-0" x 7'-0" x 1 3/4"	INS HM	NG	WIRE	HM	1	J3	J6	E12 (SIM)	11	90	010A	WEATHERSTRIP
010B	–	·	·	·	·	·	·	·	·	·	–	010B	CUSTOM ALUMINUM GATE
ST1–0	3'-0" x 7'-0" x 1 3/4"	INS HM	NG	WIRE	HM	3	J3	J6	–	9	90	ST1–0	WEATHERSTRIP
ST2–0	3'-0" x 7'-0" x 1 3/4"	HM	NG	WIRE	HM	3	J3	J6	–	9	90	ST2–0	–
101A	PR-3'-0" x 8'-0" x 1–3/4"	ALUM	FG	INS TEMP	ALUM	8	A1/AE509	D13/AE506	J12	12	–	101A	WEATHERSTRIP
101B	PR-3'-0" x 8'-0" x 1–3/4"	ALUM	FG	INS TEMP	ALUM	8	A1/AE509	D13/AE506	J12	12	–	101B	AUTO DR OPENER/CARD READ ACCESS
104A	3'-0" x 7'-0" x 1 3/4"	ALUM	FG	TEMP	ALUM	1	A10	A12	·	12	–	104A	ATTOMATIC DOOR OPENER
104B	3'-0" x 7'-0" x 1 3/4"	SCW	FG–1	WIRE	HM	9	J3	J6 (SIM)	–	7	45	104B	AUTO DR OPENER/CARD READ ACCESS
106A	PR-3'-0" x 8'-0" x 1–3/4"	ALUM	FG	INS TEMP	ALUM	7	·	A8/AE507	J12	12	–	106A	WEATHERSTRIP
106B	PR-3'-0" x 8'-0" x 1–3/4"	ALUM	FG	TEMP	ALUM	1	A10	A12	J9	12	–	106B	–
107	23'-3" x 7'-6" (F. V.)	GAL ST	CG	–	GALV ST	·	A1/A5	·	·	·	–	107	CARD ACCESS/MOTOR & SENSOR OPERATED
109	3'-0" x 7'-0" x 1 3/4"	HM	F	–	HM	3	J3	J6	·	3	45	109	.
ST1–1	3'-0" x 7'-0" x 1 3/4"	HM	NG	WIRE	HM	3	J3	J6	C12	9	90	ST1–1	.
ST2–1A	3'-0" x 7'-0" x 1 3/4"	HM	NG	WIRE	HM	3	·	A15	C12	8	90	ST2–1A	.
ST2–1B	3'-0" x 7'-0" x 1 3/4"	SCW	NG	WIRE	HM	3	·	A15	·	6	90	ST2–1B	CARD READER ACCESS
201A	3'-0" x 7'-0" x 1 3/4"	SCW	FG–1	WIRE	HM	10	N5	N8	J9	9	45	201A	–
201B	3'-0" x 7'-0" x 1 3/4"	SCW	FG–1	WIRE	HM	1	N5	N8	J9	9	45	201B	–
204	3'-0" x 7'-0" x 1 3/4"	SCW	F	–	HM	1	N5 (SIM)	N8 (SIM)	N10	5	–	204	PUSH / PULL PLATES
206	3'-0" x 7'-0" x 1 3/4"	SCW	F	–	HM	1	N5	N8	N10	5	–	206	PUSH / PULL PLATES
207	3'-0" x 7'-0" x 1 3/4"	SCW	F	–	HM	1	N5 (SIM)	N8 (SIM)	–	2	45	207	–
209	3'-0" x 7'-0" x 1 3/4"	SCW	F	–	HM	1	N5	N8	–	4	20	209	–
211	3'-0" x 7'-0" x 1 3/4"	SCW	F	–	HM	1	N5	N8	–	1	45	211	–
ST1–2	3'-0" x 7'-0" x 1 3/4"	SCW	NG	WIRE	HM	1	N5	N8	–	9	90	ST1–2	–
ST2–2	3'-0" x 7'-0" x 1 3/4"	SCW	NG	WIRE	HM	1	N5	N8	–	6	90	ST2–2	CARD READER ACCESS
304	3'-0" x 7'-0" x 1 3/4"	SCW	F	–	HM	1	N5 (SIM)	N8 (SIM)	N10	5	–	304	PUSH / PULL PLATES
306	3'-0" x 7'-0" x 1 3/4"	SCW	F	–	HM	1	N5	N8	N10	5	–	306	PUSH / PULL PLATES
307	3'-0" x 7'-0" x 1 3/4"	SCW	F	–	HM	1	N5 (SIM)	N8 (SIM)	–	1	45	307	–
309	3'-0" x 7'-0" x 1 3/4"	SCW	F	–	HM	1	N5	N8	–	4	20	309	–
311	3'-0" x 7'-0" x 1 3/4"	SCW	F	–	HM	1	N5	N8	–	1	45	311	–
ST1–3	3'-0" x 7'-0" x 1 3/4"	SCW	NG	WIRE	HM	1	N5	N8	–	9	90	ST1–3	–
ST2–3	3'-0" x 7'-0" x 1 3/4"	SCW	NG	WIRE	HM	1	N5	N8	–	6	90	ST2–3	CARD READER ACCESS
404	3'-0" x 7'-0" x 1 3/4"	SCW	F	–	HM	1	N5 (SIM)	N8 (SIM)	N10	5	–	404	PUSH / PULL PLATES
406	3'-0" x 7'-0" x 1 3/4"	SCW	F	–	HM	1	N5	N8	N10	5	–	406	PUSH / PULL PLATES
407	3'-0" x 7'-0" x 1 3/4"	SCW	F	–	HM	1	N5 (SIM)	N8 (SIM)	–	1	45	407	–
409	3'-0" x 7'-0" x 1 3/4"	SCW	F	–	HM	1	N5	N8	–	4	20	409	–
411	3'-0" x 7'-0" x 1 3/4"	SCW	F	–	HM	1	N5	N8	–	1	45	411	–
ST1–4	3'-0" x 7'-0" x 1 3/4"	SCW	NG	WIRE	HM	1	N5	N8	–	9	90	ST1–4	–
ST2–4	3'-0" x 7'-0" x 1 3/4"	SCW	NG	WIRE	HM	1	N5	N8	–	6	90	ST2–4	CARD READER ACCESS
504	3'-0" x 7'-0" x 1 3/4"	SCW	F	–	HM	1	N5 (SIM)	N8 (SIM)	N10	5	–	504	PUSH / PULL PLATES
506	3'-0" x 7'-0" x 1 3/4"	SCW	F	–	HM	1	N5	N8	N10	5	–	506	PUSH / PULL PLATES
507	3'-0" x 7'-0" x 1 3/4"	SCW	F	–	HM	1	N5 (SIM)	N8 (SIM)	–	1	45	507	–
509	3'-0" x 7'-0" x 1 3/4"	SCW	F	–	HM	1	N5	N8	–	4	20	509	–
511	3'-0" x 7'-0" x 1 3/4"	SCW	F	–	HM	1	N5	N8	–	1	45	511	–
ST1–5	3'-0" x 7'-0" x 1 3/4"	SCW	NG	WIRE	HM	1	N5	N8	–	9	90	ST1–5	–
ST2–5	3'-0" x 7'-0" x 1 3/4"	SCW	NG	WIRE	HM	1	N5	N8	–	6	90	ST2–5	CARD READER ACCESS
–	–	·	·	·	·	·	·	·	·	·	·	·	.
–	–	·	·	·	·	·	·	·	·	·	·	·	.
–	–	·	·	·	·	·	·	·	·	·	·	·	.
–	–	·	·	·	·	·	·	·	·	·	·	·	.
–	–	·	·	·	·	·	·	·	·	·	·	·	.

A1 DOOR SCHEDULE

* *

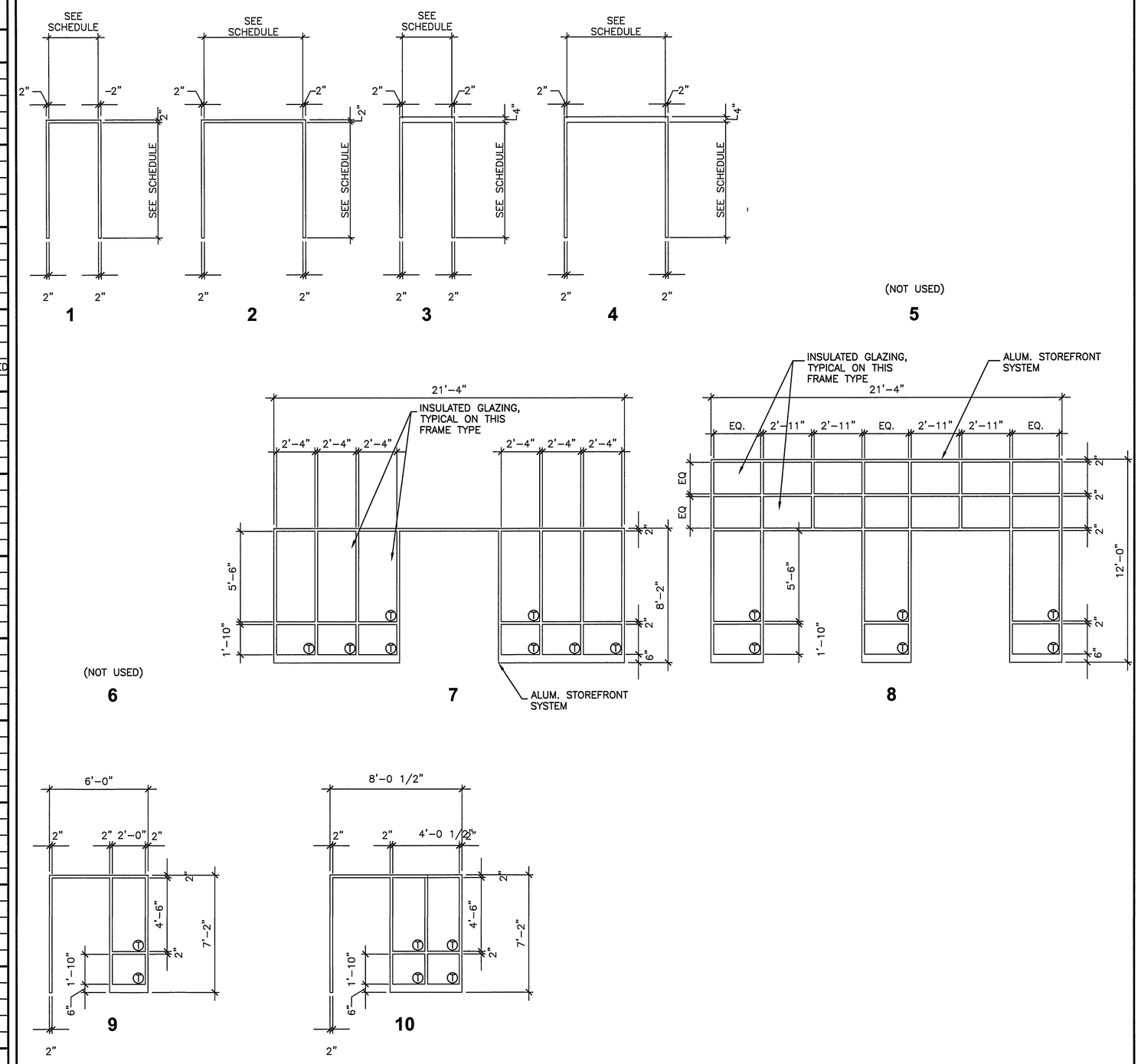

D9 FRAME TYPE ELEVATIONS

AE602 1/4" = 1'-0"

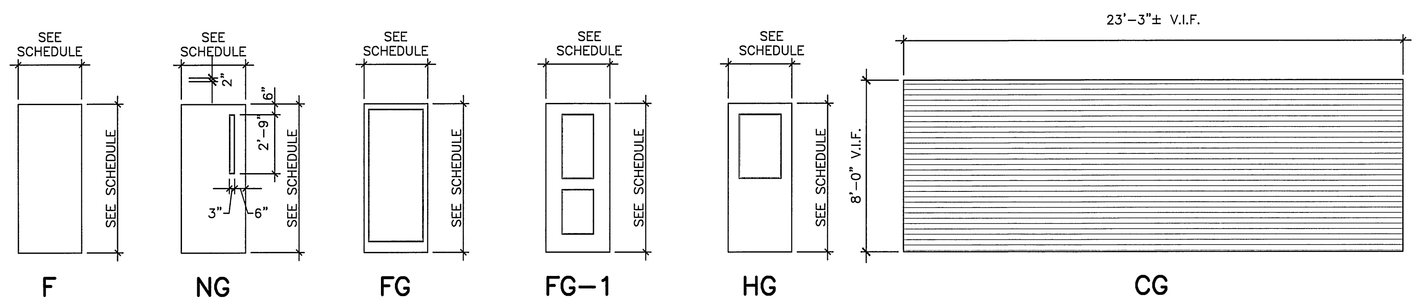

A1 DOOR TYPES

* *

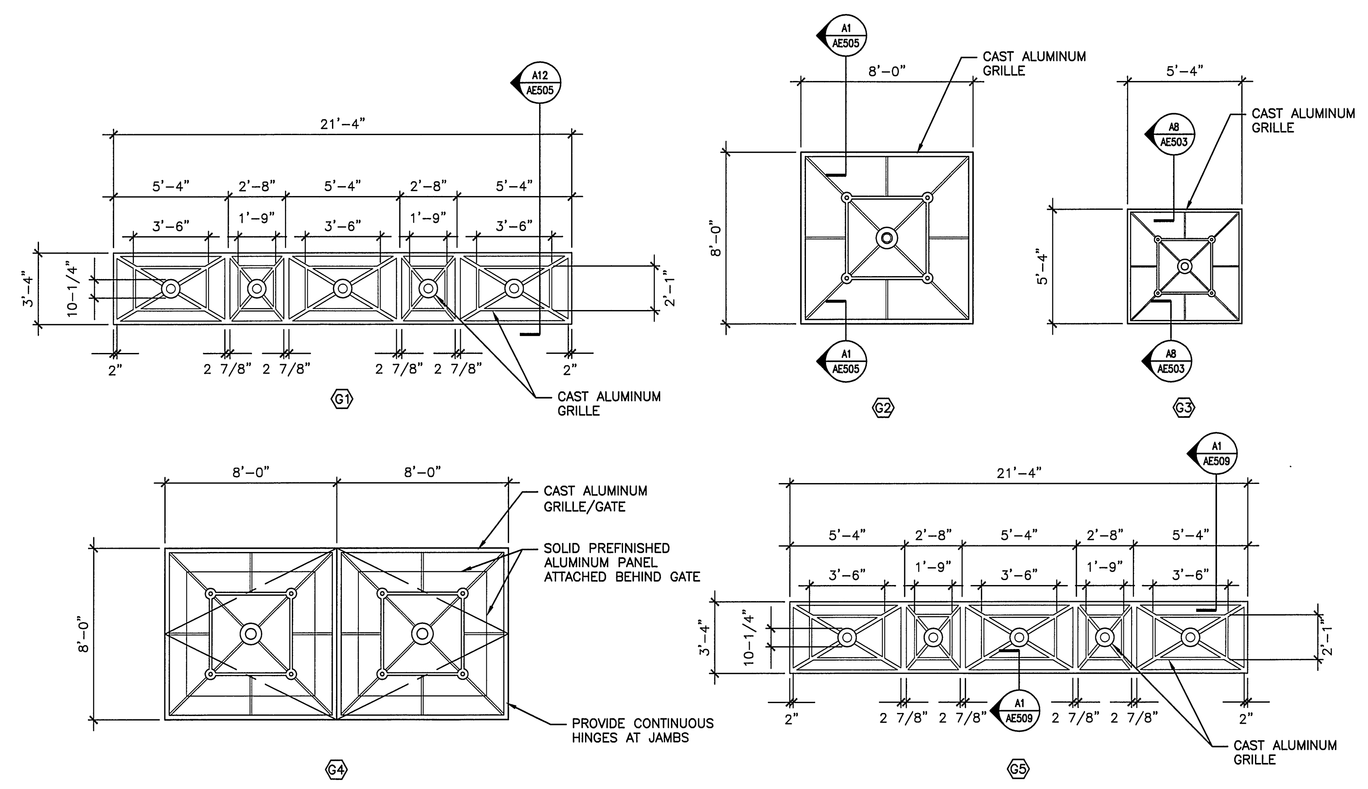

A9 GRILLE TYPES

* *

REV.	DESCRIPTION	DATE
0	ISSUED FOR CONSTRUCTION	12–15–03

ISSUED FOR CONSTRUCTION 12-15-03

CURRENT ISSUE STATUS:

LICENSED ARCHITECT JUDY No. 2061 STATE OF MAINE

SMRT

ARCHITECTURE ENGINEERING PLANNING

SMRT
144 Fore Street/P.O. Box 618
Portland, Maine 04104

tel. (207) 772-3846
fax. (207) 772-1070

PROJECT: FORE STREET OFFICE BUILDING, PORTLAND, MAINE

SHEET TITLE: DOOR, FRAME, GRILLE TYPES AND DOOR SCHEDULE

SCALE:	NTS	DATE:	12–15–03
PROJECT MANAGER:	JLJ	GRAPHIC SCALE:	0" 1"
JOB CAP/DRAWN:	RJL		
A/E OF RECORD:	JLJ	SHEET No.	AE602
SMRT CAD FILE:	AE602–03087		
PROJECT No.	03087		

© COPYRIGHT 2003 SMRT INC.