| | | | | | | | |
|---|---|---|---|---|---|---|---|
| J1 | – | -- | – | -- | – | -- | – |
| – | – | – | – | – | – | – | – |

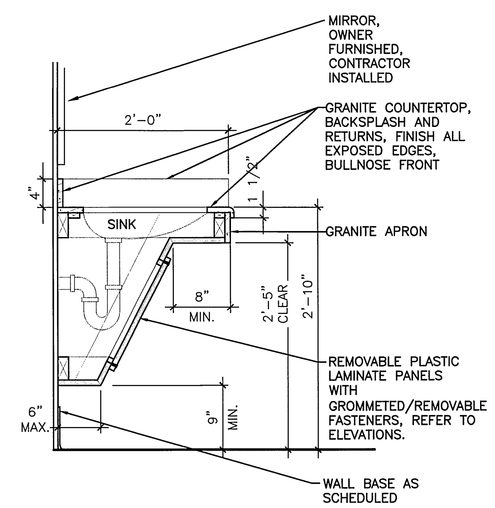


| | | | |
|---|---|---|---|
| -- | – | E10 | VANITY DETAIL |
| – | – | 1"=1'-0" | AE211 |

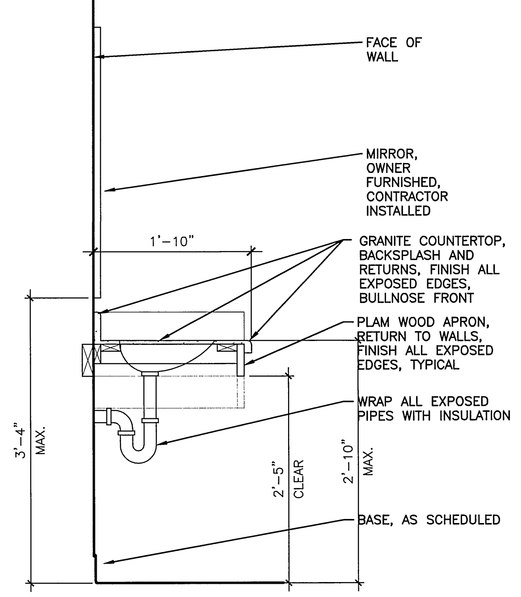


| | | | |
|---|---|---|---|
| E13 | VANITY DETAIL | A1 | – |
| 1"=1'-0" | AE211 | – | – |

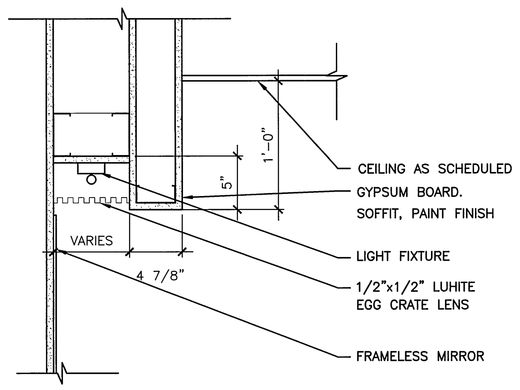


| | |
|---|---|
| A13 | LIGHT COVE DETAIL AT BATHROOMS |
| 1-1/2"=1'-0" | AE107, AE108, AE109, AE110, AE111, AE112, AE211 |

| REV. | DESCRIPTION | DATE |
|---|---|---|
| 0 | ISSUED FOR CONSTRUCTION | 12-15-03 |

**ISSUED FOR CONSTRUCTION 12-15-03**

CURRENT ISSUE STATUS:

LICENSED ARCHITECT JUDY L. JOHNSON No. 6060 STATE OF MAINE


SMRT

ARCHITECTURE ENGINEERING PLANNING

SMRT
144 Fore Street/P.O. Box 618
Portland, Maine 04104

tel. (207) 772-3846
fax. (207) 772-1070


PROJECT: FORE STREET OFFICE BUILDING
PORTLAND, MAINE

SHEET TITLE: MISCELLANEOUS DETAILS

| | | | |
|---|---|---|---|
| SCALE: | AS NOTED | DATE: | 12-15-03 |
| PROJECT MANAGER: | JLJ | GRAPHIC SCALE: | 0" 1" |
| JOB CAP/DRAWN: | RJL | | |
| A/E OF RECORD: | JLJ | SHEET No. | AE521 |
| SMRT CAD FILE: | AE521-03087 | | |
| PROJECT No. | 03087 | | |

© COPYRIGHT 2003 SMRT INC.