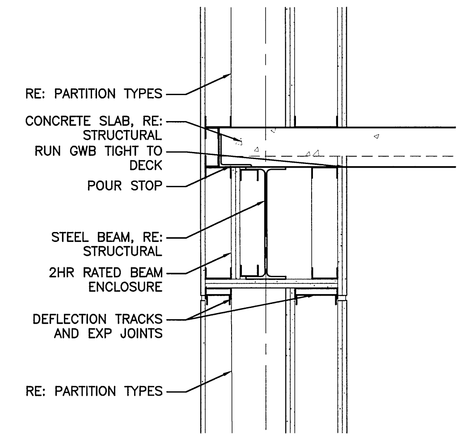

L9	STAIR DETAIL
1"=1'-0"	AE411

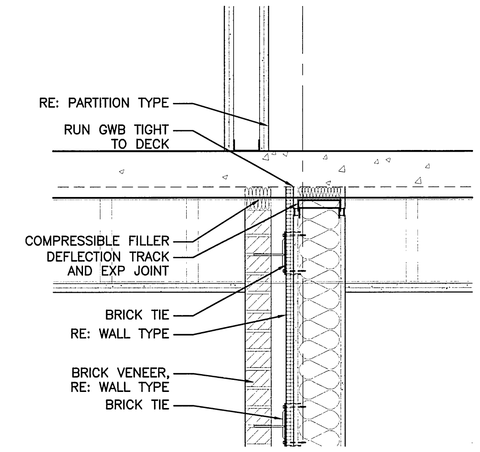

L14	STAIR DETAIL
1"=1'-0"	AE411

L1	–
1"=1'-0"	–

L5	–
1"=1'-0"	–

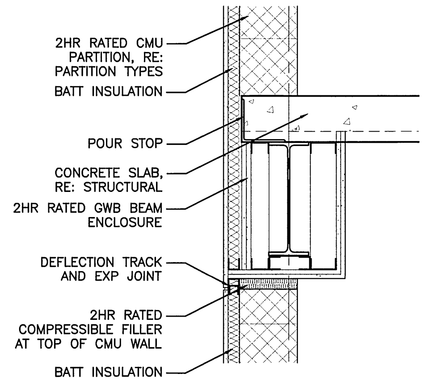

F9	STAIR DETAIL
1"=1'-0"	AE411

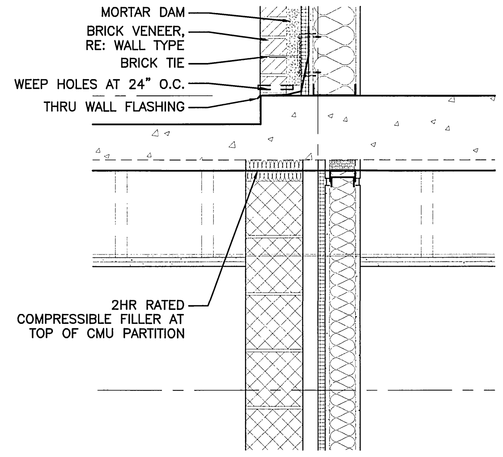

F14	STAIR DETAIL
1"=1'-0"	AE411

F1	–
1"=1'-0"	–

F5	–
1"=1'-0"	–

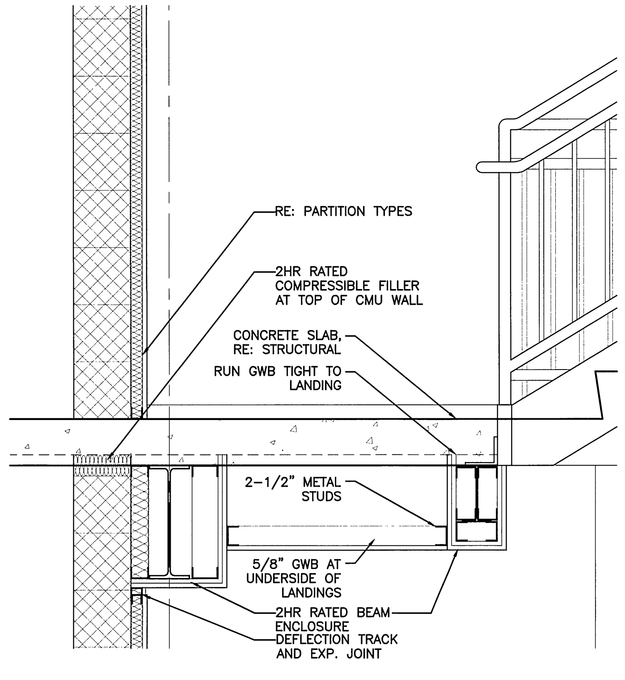

A9	STAIR DETAIL
1"=1'-0"	AE411

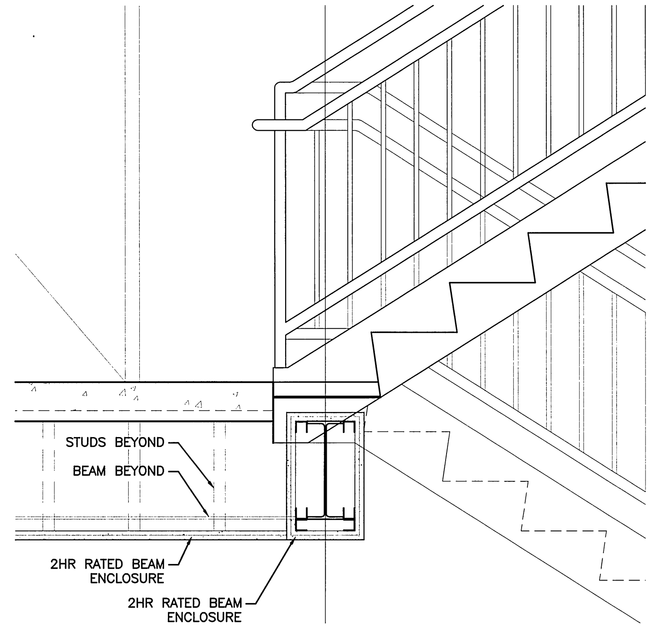

A13	STAIR DETAIL
1"=1'-0"	AE411

A1	–
1"=1'-0"	–

A5	–
1"=1'-0"	–

REV.	DESCRIPTION	DATE
0	ISSUED FOR CONSTRUCTION	12-15-03

ISSUED FOR CONSTRUCTION
12-15-03

CURRENT ISSUE STATUS:

LICENSED ARCHITECT JUDY JOHNSON No. 2060 STATE OF MAINE

SMRT

ARCHITECTURE ENGINEERING PLANNING

SMRT
144 Fore Street/P.O. Box 618
Portland, Maine 04104

tel. (207) 772-3846
fax. (207) 772-1070

PROJECT:
FORE STREET
OFFICE BUILDING
PORTLAND, MAINE

SHEET TITLE:
STAIR AND
RAILING DETAILS

SCALE:	AS NOTED	DATE:	12-15-03
PROJECT MANAGER:	JLJ	GRAPHIC SCALE:	0" 1"
JOB CAP/DRAWN:	RJL		
A/E OF RECORD:	JLJ	SHEET No.	
SMRT CAD FILE:	AE512-03087	AE512	
PROJECT No.	03087		

© COPYRIGHT 2002 SMRT INC.