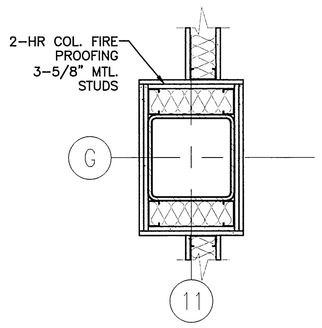

P8	PLAN DETAIL
1"=1'-0"	*

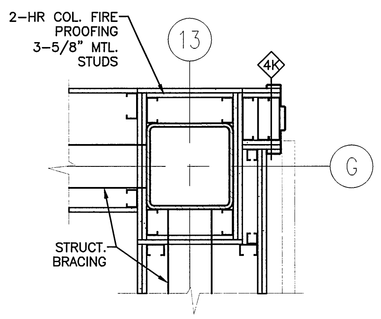

P10	PLAN DETAIL
1"=1'-0"	AE102

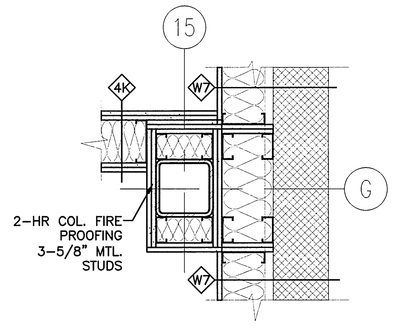

P14	PLAN DETAIL
1"=1'-0"	AE102

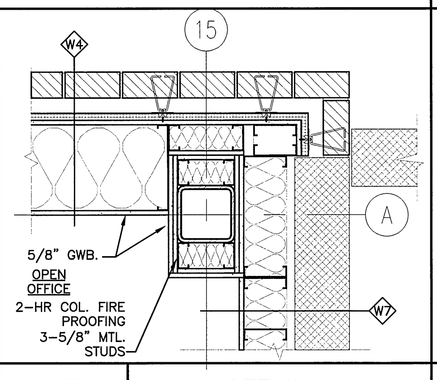

G1	PLAN DETAIL
1"=1'-0"	–

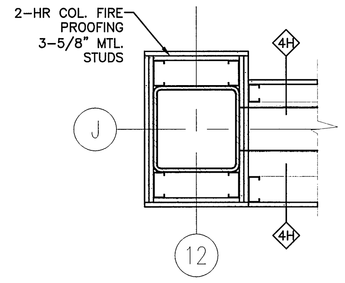

G5	PLAN DETAIL
1"=1'-0"	AE101

G8	PLAN DETAIL
1"=1'-0"	AE102

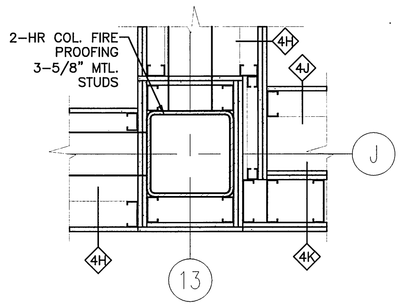

G10	PLAN DETAIL
1"=1'-0"	AE102

G14	PLAN DETAIL
1"=1'-0"	*

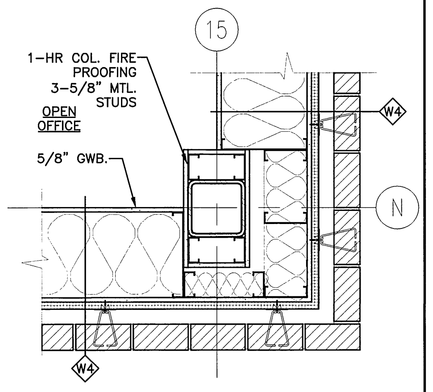

H1	PLAN DETAIL
1"=1'-0"	–

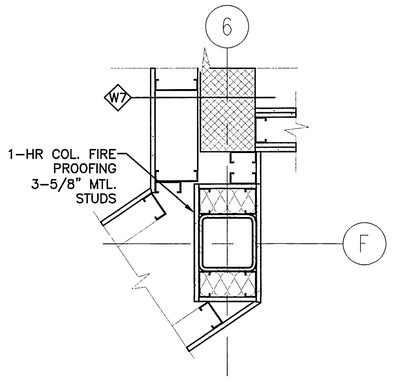

H5	PLAN DETAIL
1"=1'-0"	AE101

H8	PLAN DETAIL
1"=1'-0"	AE101

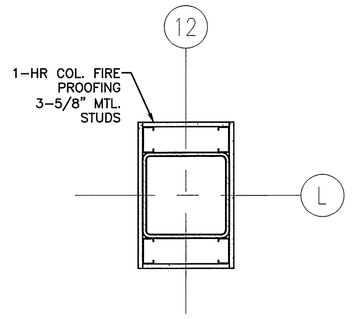

H10	PLAN DETAIL
1"=1'-0"	AE100

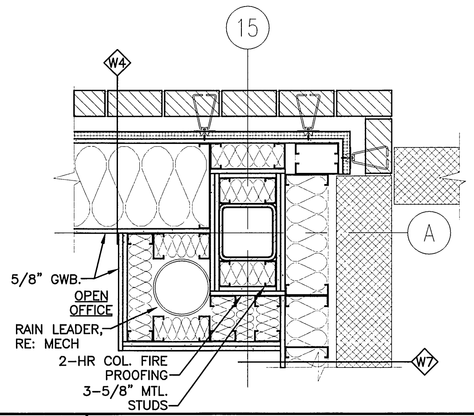

H13	PLAN DETAIL
1"=1'-0"	–

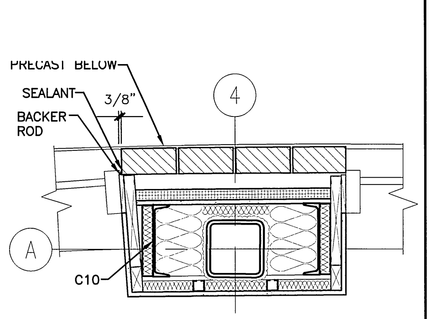

D1	PLAN DETAIL
1"=1'-0"	AE100

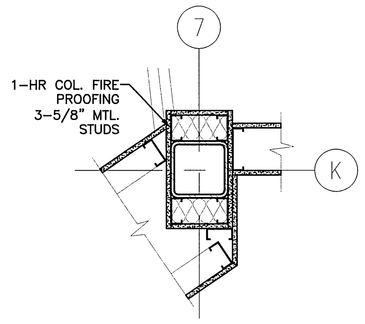

D3	PLAN DETAIL
1"=1'-0"	AE101

D5	PLAN DETAIL
1"=1'-0"	AE101

D8	PLAN DETAIL
1"=1'-0"	AE101

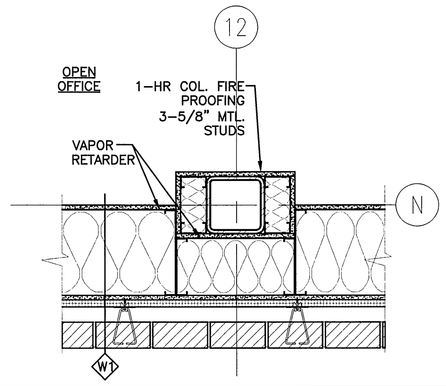

D10	PLAN DETAIL
1"=1'-0"	AE101

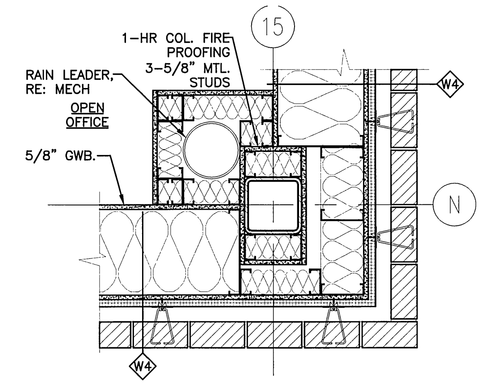

D13	PLAN DETAIL
1"=1'-0"	–

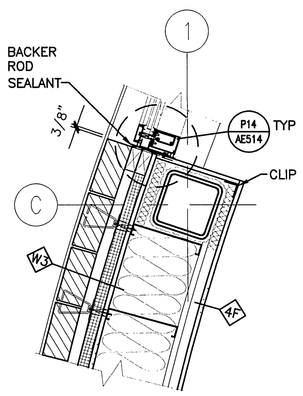

A1	PLAN DETAIL
1"=1'-0"	AE101, AE102

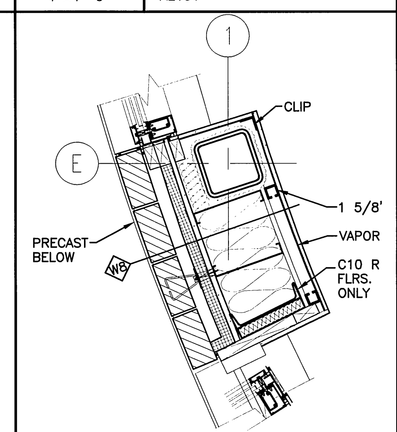

A3	PLAN DETAIL
1"=1'-0"	AE101, AE102

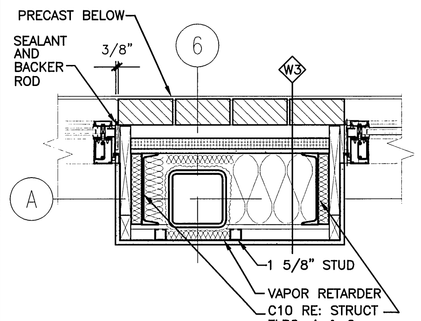

A5	PLAN DETAIL
1"=1'-0"	AE101, AE102

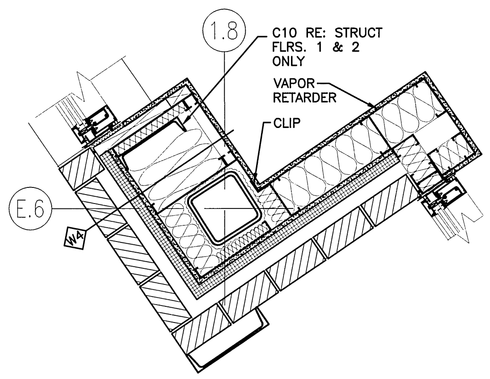

A8	PLAN DETAIL
1"=1'-0"	AE101, AE102

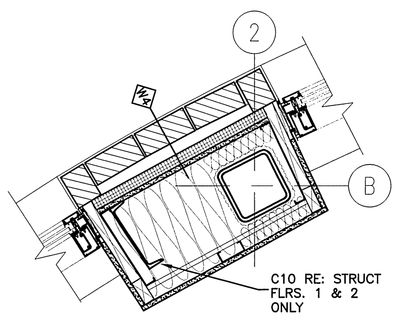

A11	PLAN DETAIL
1"=1'-0"	AE101, AE102

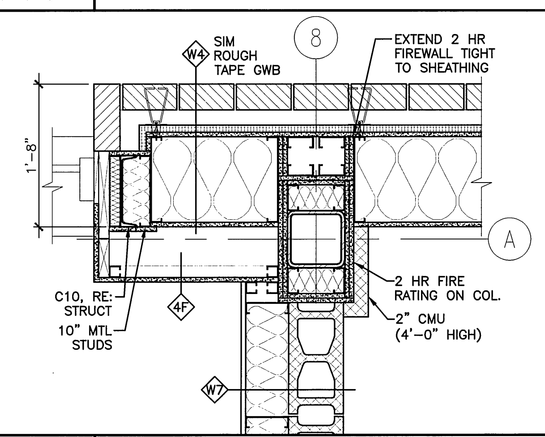

A14	PLAN DETAIL
1"=1'-0"	AE101

REV.	DESCRIPTION	DATE
0	ISSUED FOR CONSTRUCTION	12-15-03

ISSUED FOR CONSTRUCTION
12-15-03

CURRENT ISSUE STATUS:

LICENSED ARCHITECT JUDY LIEBHAUSER JOHNSON NO. 2061 STATE OF MAINE

SMRT

ARCHITECTURE ENGINEERING PLANNING

SMRT
144 Fore Street/P.O. Box 618
Portland, Maine 04104

tel. (207) 772-3846
fax. (207) 772-1070

PROJECT: FORE STREET OFFICE BUILDING, PORTLAND, MAINE

SHEET TITLE: DETAILS

SCALE:	AS NOTED	DATE:	12-15-03
PROJECT MANAGER:	JLJ	GRAPHIC SCALE:	0" 1"
JOB CAP/DRAWN:	RJL		
A/E OF RECORD:	JLJ	SHEET No.	AE507
SMRT CAD FILE:	AE507-03087		
PROJECT No.	03087		

© COPYRIGHT 2002 SMRT INC.