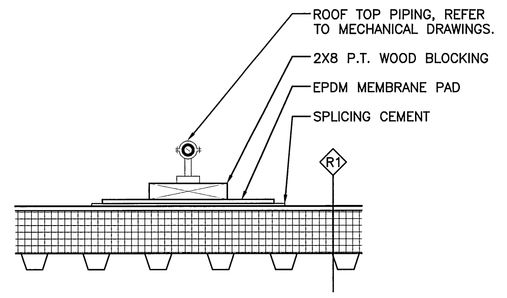

N9	ROOF TOP PIPING SLEEPER DETAIL
1-1/2" = 1'-0"	

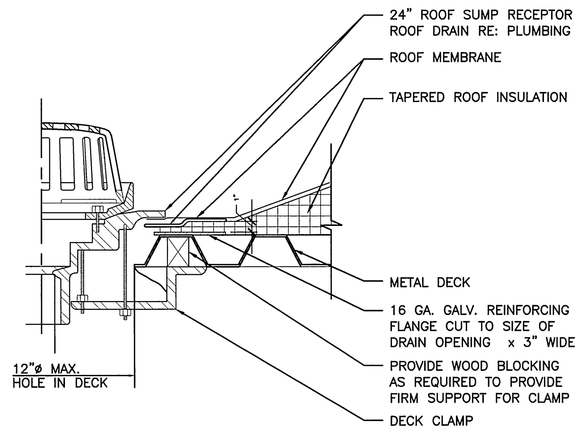

N13	ROOF DRAIN
1-1/2" = 1'-0"	

N13	
1-1/2" = 1'-0"	

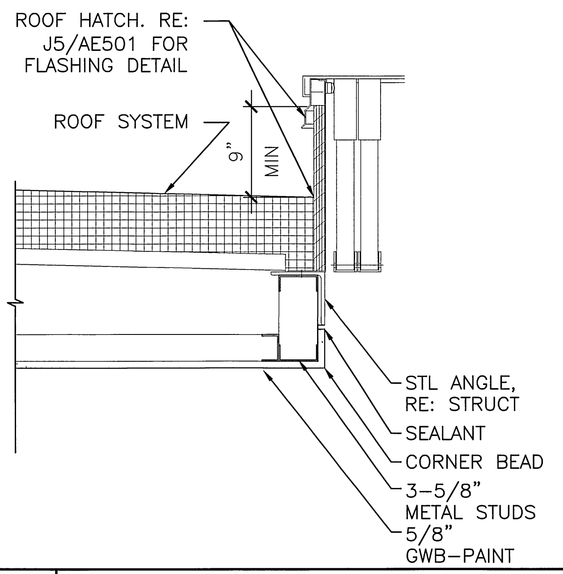

F1	HATCH DETAIL
1-1/2" = 1'-0"	AE411

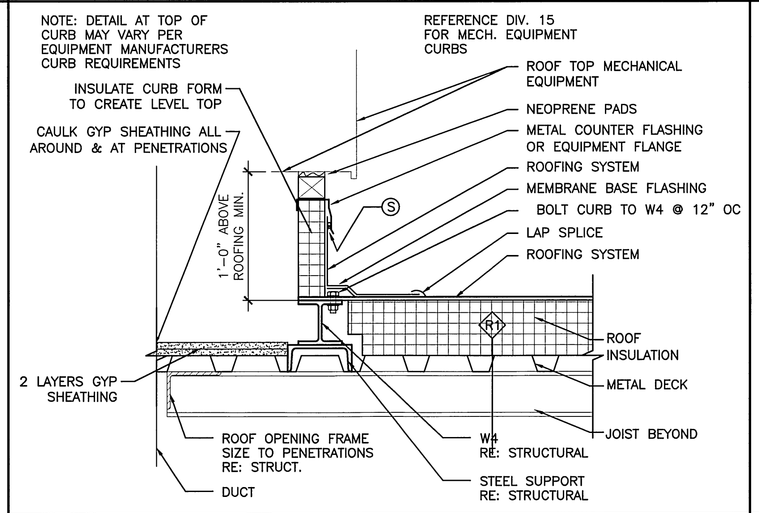

J5	ROOF TOP UNIT CURB DETAIL
1-1/2" = 1'-0"	

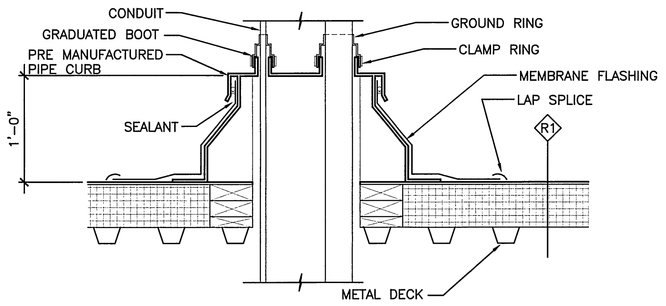

J9	MULTIPLE PIPE/CONDUIT PENETRATIONS
1-1/2" = 1'-0"	

J13	
1-1/2" = 1'-0"	

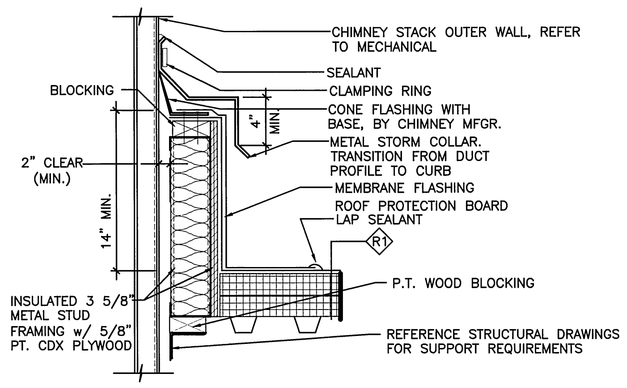

E5	CHIMNEY STACK PENETRATION
1-1/2" = 1'-0"	

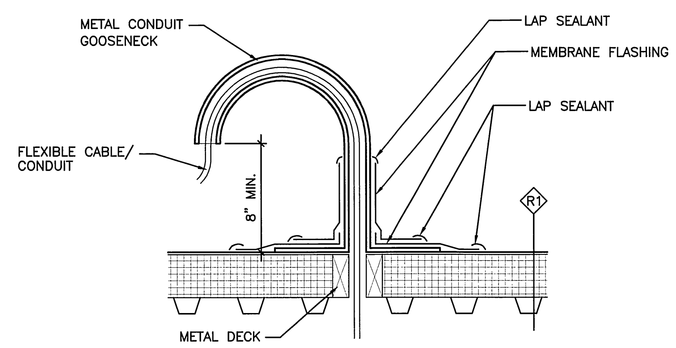

E9	SINGLE CONDUIT/CABLE PENETRATION
1-1/2" = 1'-0"	

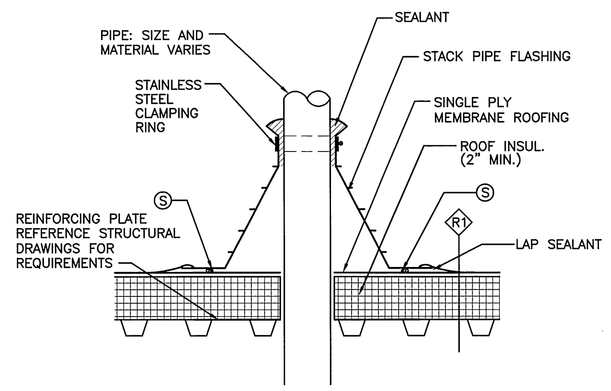

E13	PIPING PENETRATION
1-1/2" = 1'-0"	

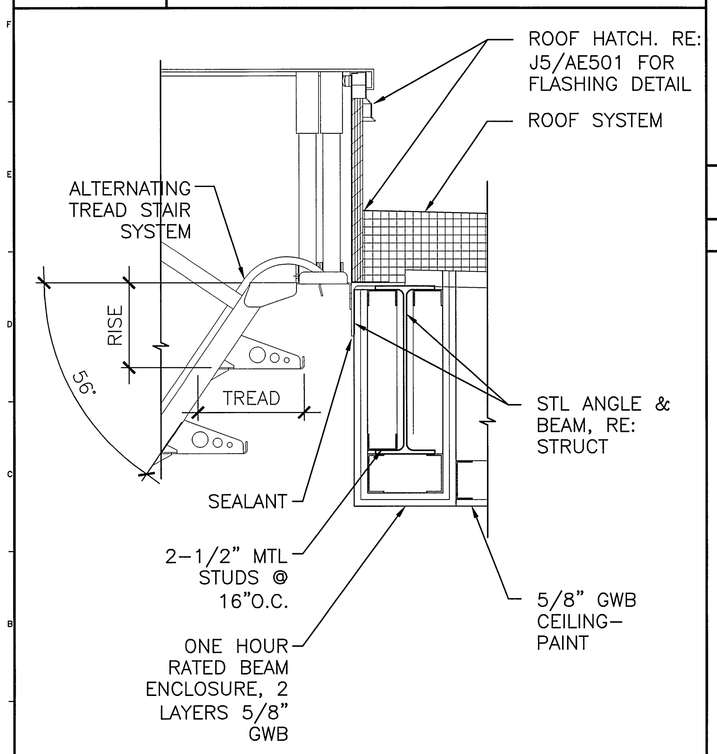

A1	HATCH DETAIL
1-1/2" = 1'-0"	AE411

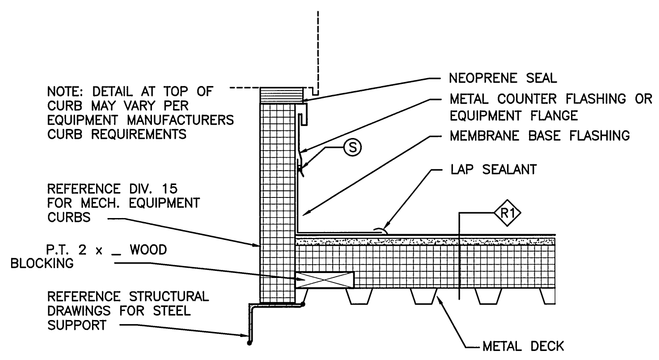

A5	EXHAUST FAN DETAIL
1-1/2" = 1'-0"	

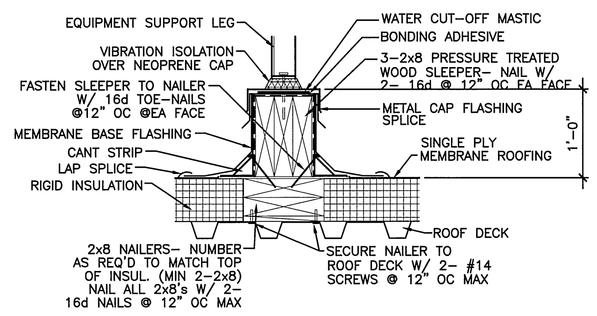

A9	–
–	

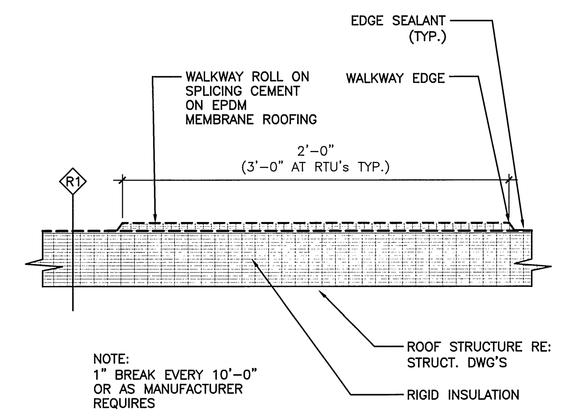

A13	TRAFFIC PAD DETAIL
1-1/2" = 1'-0"	

REV.	DESCRIPTION	DATE
0	ISSUED FOR CONSTRUCTION	12-15-03

ISSUED FOR CONSTRUCTION
12-15-03

CURRENT ISSUE STATUS:

LICENSED ARCHITECT JUDY L. LAMOTHE No. 6100 STATE OF MAINE

SMRT

ARCHITECTURE ENGINEERING PLANNING

SMRT
144 Fore Street/P.O. Box 618
Portland, Maine 04104
tel. (207) 772-3846
fax. (207) 772-1070

PROJECT: FORE STREET OFFICE BUILDING, PORTLAND, MAINE

SHEET TITLE: ROOF DETAILS

SCALE:	AS NOTED	DATE:	12-15-03
PROJECT MANAGER:	JLJ	GRAPHIC SCALE:	0" 1"
JOB CAP/DRAWN:	RJL		
A/E OF RECORD:	JLJ	SHEET No.	AE501
SMRT CAD FILE:	AE501-03087		
PROJECT No.	03087		

© COPYRIGHT 2002 SMRT INC.