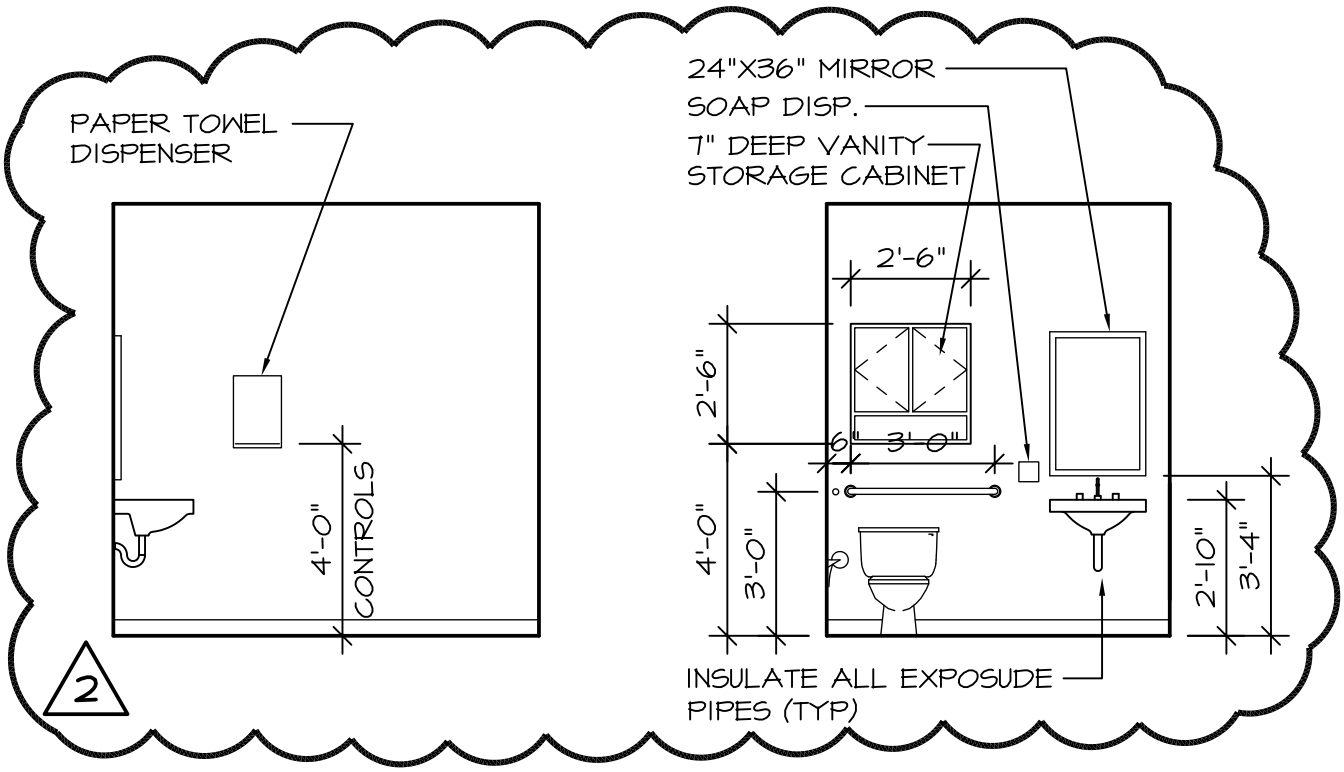

WBRC
ARCHITECTS · ENGINEERS

BANGOR, MAINE
(207) 947-4511
SARASOTA, FLORIDA
(941) 373-1583
WWW.WBRCAE.COM

SCALE:	1/4" = 1'-0"
WBRC CAD FILE	274769-AE203.DWG
PROJECT No.	2747.69
JOB CAP/DRAW:	KRJ
PM: DCM	SHEET No.
CHECKED BY: MLC	ADD2-AE203-1
DATE: 06.30.04	

PROJECT: BANGOR SAVINGS BANK
FORE STREET

SUBJECT REVISED LAVATORY
DETAIL H1, H2 & A8/AE203

© COPYRIGHT 2004 WBRC