SIMPLEX
4004R

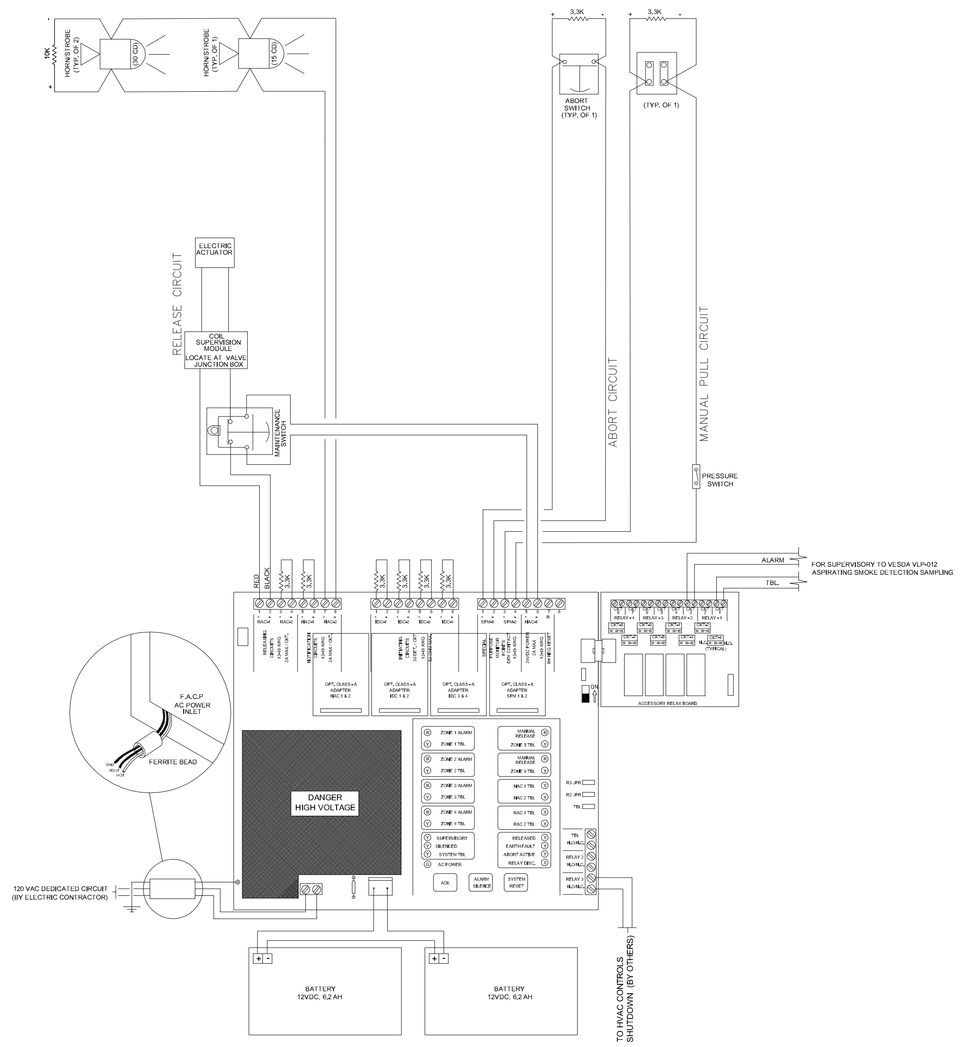

WIRING SCHEMATIC

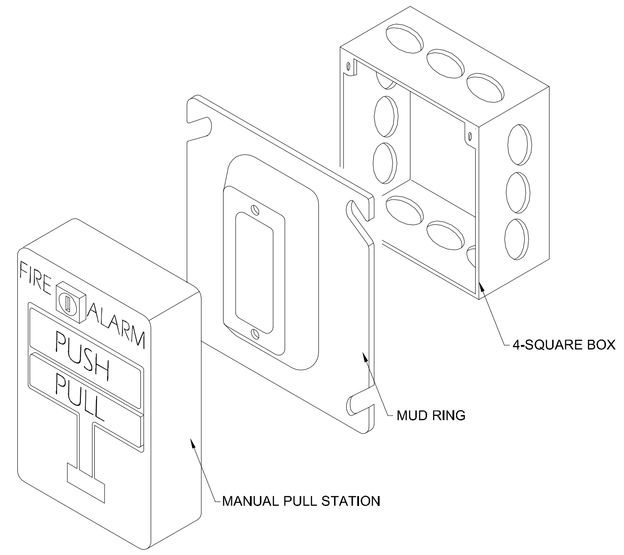

MANUAL RELEASE STATION

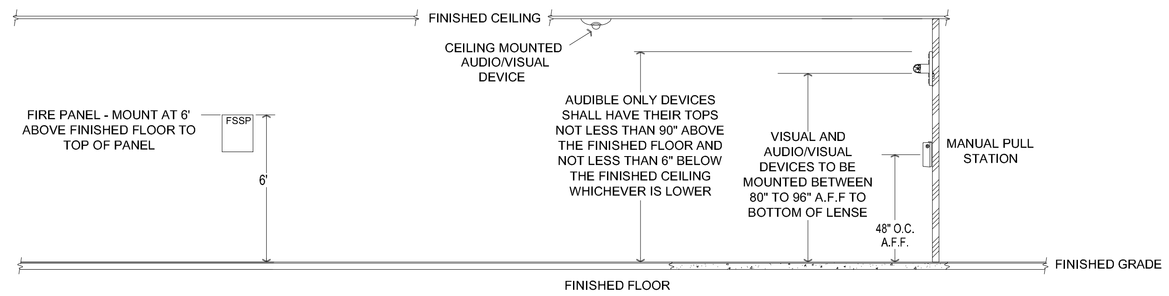

DEVICE LOCATION REQUIREMENTS

CONTROL PANEL SCHEMATIC N.T.S.

ELECTRICAL COMPONENTS N.T.S.

SEQUENCE OF OPERATION:

1. AIR SAMPLING SMOKE DETECTION (ASSD) "ALERT":
   1.1. DISPLAY "ALERT" CONDITION AND SOUND LOCAL AUDIBLE SIGNAL AT ASSD DISPLAY, CLEAN AGENT RELEASE PANEL.
   1.2. CLOSE "ASSD ALERT" CONTACTS TO BUILDING SECURITY SYSTEM.
   1.3. CLOSE "ASSD ALERT" CONTACTS TO BUILDING AUTOMATION SYSTEM.

2. AIR SAMPLING SMOKE DETECTION (ASSD) "ACTION":
   2.1. DISPLAY "ACTION" CONDITION AND SOUND LOCAL AUDIBLE SIGNAL AT ASSD DISPLAY, CLEAN AGENT RELEASE PANEL.
   2.2. ENERGIZE CLEAN AGENT SYSTEM HORNS (TEMPORAL).
   2.3. CLOSE "ASSD ACTION" CONTACTS TO BUILDING SECURITY SYSTEM.
   2.4. CLOSE "ASSD ACTION" CONTACTS TO BUILDING AUTOMATION SYSTEM.

3. AIR SAMPLING SMOKE DETECTION (ASSD) "FIRE 1":
   3.1. DISPLAY "FIRE 1" CONDITION AND SOUND LOCAL AUDIBLE SIGNAL AT ASSD DISPLAY, CLEAN AGENT RELEASE PANEL.
   3.2. CLOSE "COMMON ALARM" CONTACTS TO BUILDING FIRE ALARM SYSTEM.
   3.3. CLOSE "ASSD FIRE 1" CONTACTS TO BUILDING SECURITY SYSTEM.
   3.4. CLOSE "ASSD FIRE 1" CONTACTS TO BUILDING AUTOMATION SYSTEM.

4. AIR SAMPLING SMOKE DETECTION (ASSD) "FIRE 2":
   4.1. DISPLAY "FIRE 2" CONDITION AND SOUND LOCAL AUDIBLE SIGNAL AT ASSD DISPLAY, CLEAN AGENT RELEASE PANEL.
   4.2. CLOSE "ASSD FIRE 2" CONTACTS TO BUILDING SECURITY SYSTEM.
   4.3. CLOSE "ASSD FIRE 2" CONTACTS TO BUILDING AUTOMATION SYSTEM.
   4.4. SHUTDOWN RECORDS ROOM HVAC UNITS.
   4.5. BEGIN 60 SECOND AGENT DISCHARGE COUNTDOWN.
   4.6. CLOSE "AGENT DISCHARGE COUNTDOWN START" CONTACTS TO BUILDING SECURITY SYSTEM.
   4.7. CLOSE "AGENT DISCHARGE COUNTDOWN START" CONTACTS TO BUILDING AUTOMATION SYSTEM.
   4.8. SWITCH CLEAN AGENT SYSTEM HORNS TO CONSTANT TONE.
        ENERGIZE CLEAN AGENT TANK RELEASE ACTUATORS AT THE CONCLUSION OF COUNTDOWN.
   4.9. CLOSE "AGENT DISCHARGE" CONTACTS TO BUILDING SECURITY SYSTEM UPON DISCHARGE.
   4.10. CLOSE "AGENT DISCHARGE" CONTACTS TO BUILDING AUTOMATION SYSTEM UPON DISCHARGE.

5. MANUAL RELEASE
   5.1. DISPLAY "MANUAL RELEASE" CONDITION AND SOUND LOCAL AUDIBLE SIGNAL AT ASSD DISPLAY, CLEAN AGENT RELEASE PANEL.
   5.2. CLOSE "COMMON ALARM" CONTACTS TO BUILDING FIRE ALARM SYSTEM.
   5.3. SHUTDOWN RECORDS ROOM HVAC UNITS.
   5.4. BEGIN 60 SECOND AGENT DISCHARGE COUNTDOWN.
   5.5. CLOSE "AGENT DISCHARGE COUNTDOWN START" CONTACTS TO BUILDING SECURITY SYSTEM.
   5.6. CLOSE "AGENT DISCHARGE COUNTDOWN START" CONTACTS TO BUILDING AUTOMATION SYSTEM.
   5.7. ENERGIZE CLEAN AGENT SYSTEM HORNS (CONSTANT).
        ENERGIZE CLEAN AGENT TANK RELEASE ACTUATORS AT THE CONCLUSION OF COUNTDOWN.
   5.8. CLOSE "AGENT DISCHARGE" CONTACTS TO BUILDING SECURITY SYSTEM UPON DISCHARGE.
   5.9. CLOSE "AGENT DISCHARGE" CONTACTS TO BUILDING AUTOMATION SYSTEM UPON DISCHARGE.

6. ABORT SWITCH
   6.1. SUSPEND AGENT DISCHARGE COUNTDOWN.
   6.2. CLOSE "AGENT DISCHARGE ABORT" CONTACTS TO BUILDING SECURITY SYSTEM UPON DISCHARGE.
   6.3. CLOSE "AGENT DISCHARGE ABORT" CONTACTS TO BUILDING AUTOMATION SYSTEM UPON DISCHARGE.

CABLE LEGEND

DESIGNATION	DESCRIPTION	TYPE	MANF.
A	INDICATING CIRCUIT	14GA.-2 COND.	ATLAS CABLE
B	INITIATING CIRCUIT	16GA.-2 COND.	ATLAS CABLE
"x"A "x"B	"x" = QTY. OF (A) CABLES "x" = QTY. OF (B) CABLES	-	-
C	VESDA	30-12 AWG	-

BATTERY CALCULATION:

Battery Calculation Worksheet
(all currents stated in A)

Device Description	Quantity of Devices	Standby A Per Device	Alarm A Per Device	Tot. Device Standby A	Tot. Device Alarm A
Control Panel	1	0.10000	0.26400	0.10000	0.26400
Auxilliary Devices (List All)					
Electric Pull station 120 VAC	1	0.00000	1.00000	0.00000	1.00000
Abort Station 24 VDC	1	0.00000	1.10000	0.00000	1.10000
Maintenance Switch	1	0.00000	2.00000	0.00000	2.00000
Electric Actuator	1	0.00000	0.20000	0.00000	0.20000
Coil Supervision	1	0.00000	2.00000	0.00000	2.00000
Auxilliary Relay Module	1	0.01200	0.07000	0.01200	0.07000
Device Totals	**7**			0.11200	6.63400
Notification Appliances (list all)					
horn/strobe 24 VDC 30 cd	2	N/A	0.137	N/A	0.274
horn/strobe 24 VDC 15 cd	1	N/A	0.115	N/A	0.115
Notification Appliance Totals	3				0.38900
			Total Alarm A/h	**0.112**	**7.023**

Summary Section	
Standby Hrs. Required	24
Alarm Sounding Minutes	5
Total System Standby A/H	0.11
Total System Alarm A/H	7.023
Total System Standby in 24hrs	2.688000
Total System Alarm A/H in 5min	0.585250
Min. A/H Battery Required	**3.27**
20% DERATING FACTOR	**0.65**
Recommended A/H Battery	**3.93**

2-6.2 AH BATTERY SHALL BE PROVIDED
GELL-CELL TYPE, PROVIDING 24 VDC

VOLTAGE DROP CALCULATION:

Device Description	Alarm A Per Device	Distance	Volts Dropped
Horn/strobe 24 VDC 15 cd	0.115	30	0.01813
Horn/strobe 24 VDC 30 cd	0.137	30	0.02160
Horn/strobe 24 VDC 30 cd	0.137	60	0.04320
	Total V Dropped:		0.09
	% Dropp:		0.36%

Percentage Drop Not To Exceed 10%
Volts Dropped = Wire Distance X Current X 21.6/4110 (Circular Mils For #14 Wire)

ELECTRICAL NOTES:

1. 120 VAC/60 Hz POWER TO BE FROM A DEDICATED BRANCH CIRCUIT USING 3-#12 THHN WIRES. THE CIRCUIT IS TO BE MECHANICALLY PROTECTED.
2. 120 VAC CIRCUITS TO BE IN SEPARATE CONDUIT AND JUNCTION BOXES FROM POWER LIMITED FIRE ALARM CIRCUITS.
3. THE SELECTION AND INSTALLATION OF ALL WIRING SHALL CONFORM TO THE APPLICABLE PROVISIONS OF THE LOCAL STANDARDS APPROVED BY THE AUTHORITY HAVING JURISDICTION FIRE DEPARTMENT, FIRE AND LIFE SAFETY DIVISION .
4. ALL CONDUIT TO BE RUN PARALLEL OR AT RIGHT ANGLES TO BUILDING LINES.
5. EQUIPMENT LOCATION & CONDUIT RUNS ARE SHOWN DIAGRAMMATICALLY. EXACT LOCATION TO BE FIELD VERIFIED. ADJUST DEVICE LOCATIONS TO ACCOMMODATE FIELD OBSTRUCTIONS.
6. DETECTORS TO BE LOCATED 3'-0" MIN. AWAY FROM SUPPLY AIR OUTLETS.
7. POLARITY MUST BE OBSERVED ON ALL CIRCUITS.
8. ALL WIRING INSIDE CONTROL PANEL TO BE DRESSED-OUT AND CONNECTED IN A NEAT AND ORDERLY MANNER.
9. IDENTIFICATION NUMBER ADJACENT TO INITIATING OR INDICATING DEVICES DENOTES ORDER OF WIRING. EXAMPLE: DETECTOR 1-2 WOULD IDENTIFY THE 2ND DETECTOR ON THE 1ST ZN.
10. POLARITY ON INDICATING AND/OR RELEASING CIRCUITS IS SHOWN IN SUPERVISORY CONDITION.
11. TROUBLE RELAY IS SHOWN IN NORMAL, NON-TROUBLE CONDITION (ENERGIZED).
12. ALL RELAY CONTACTS ARE RATED 120VAC/5A RESISTIVE U.N.O.
13. DISCONNECT BATTERIES FIRST THEN 120VAC POWER BEFORE ATTEMPTING ANY TYPE OF MAINTENANCE ON SYSTEM. CONNECT 120VAC PWR. FIRST AND THEN BATTERIES WHEN POWERING UP SYSTEM.
14. END OF LINE RESISTORS ARE PACKED WITH THE PANEL.
15. SECONDARY POWER SUPPLY SHALL PROVIDE 24-HOURS OF STAND-BY, AND 5-MINUTES OF ALARM.
16. ALL WIRING TO BE RUN IN CONDUIT. ALL LOW VOLTAGE WIRE TO BE #14 THHN.
17. PARALLEL BRANCHING OF SUPERVISED CIRCUITS IS NOT ALLOWED.

FIRE STOP DETAIL

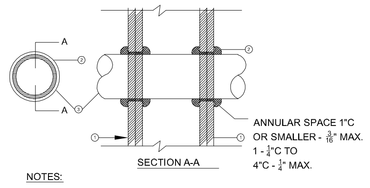

NOTES:

1. GYP BOARD, 5/8" THICK: 1HR. - 1 LAYER, 2HR. - 2 LAYERS.

2. FILL, VOID OR CAVITY MATERIAL - CAULK: CAULK FILL MATERIAL FORCED INTO ANNULAR SPACE TO MAX. EXTENT POSSIBLE AND WITH A MIN. 1/4" DIAMETER BEAD OF CAULK APPLIED TO PERIMETER OF PIPE OR CONDUIT AT ITS EGRESS FROM THE WALL. MINNESOTA MINING & MANUFACTURING CO.: TYPES SP -25 S/L, CP -25 N/S.

3. CONDUIT: NOM. 4" DIAMETER (OR SMALLER) STEEL EMT CONDUIT OR NOM. 1" DIAMETER (OR SMALLER) FLEXIBLE STEEL CONDUIT. A MAX. OF ONE PIPE OR CONDUIT IS PERMITTED IN THE FIRE STOP SYSTEM. PIPE OR CONDUIT TO BE INSTALLED NEAR CENTER OF STUD CAVITY WIDTH AND TO BE RIGIDLY SUPPORTED ON BOTH SIDES OF WALL ASSEMBLY.

4. FIRE STOP SYSTEM: INSTALLED SYMMETRICALLY ON BOTH SIDES OF WALL ASSEMBLY. THE HOURLY F RATING OF THE FIRESTOP SYSTEM IS EITHER 1 OR 2 HR. DEPENDING UPON THE HOURLY FIRE RATING OF THE WALL ASSEMBLY IN WHICH IT IS INSTALLED. THE HOURLY T RATING FOR THE FIRE STOP SYSTEM ARE DEPENDENT UPON THE SIZE OF THE CONDUIT. THE FIRE STOP CONFIGURATION AND THE HOURLY FIRE RATING OF THE WALL ASSEMBLY IN WHICH IT IS INSTALLED. THE FIRE STOP CONFIGURATION IS DEPENDENT UPON THE SIZE OF THE ANNULAR SPACE BETWEEN THE STEEL PIPE OR CONDUIT (OR PIPE COVERING) AND THE PERIMETER OF THE CIRCULAR THROUGH OPENING IN THE GYPSUM WALLBOARD LAYERS.

XHEZ SYSTEM NO. WL1001
F RATINGS - 1 AND 2 HR. (SEE NOTE 4)

SEQUENCE OF OPERATION/LEGEND/BATTERY CALCS.

ELECTRICAL NOTES

tyco / Fire & Security / SimplexGrinnell
20 THOMAS DRIVE
WESTBROOK, ME. 04092
PHONE: (207) 842-5440
DIRECT: (207) 482-2343

© 2011 ISBAH ENGINEERING, LLP
ALL RIGHTS RESERVED

NO.	DATE	REVISION DESCRIPTION	CHKD BY

INERGEN–FIRE SUPPRESSION – SYSTEM

BERNSTEIN, SHUR, SAWYER & NELSON
100 MIDDLE STREET
WEST TOWER PORTLAND, ME 04104-5025

DRAWN BY: SEFP	DATE: MAY 23, 2013
DESIGNED BY: SEFP	DATE: MAY 23, 2013
APPROVED BY:	DATE:
PROJECT NUMBER:	
SHEET TITLE: INERGEN-FIRE SUPPRESSION-SYSTEM	
SHEET NUMBER: 3 OF 3	