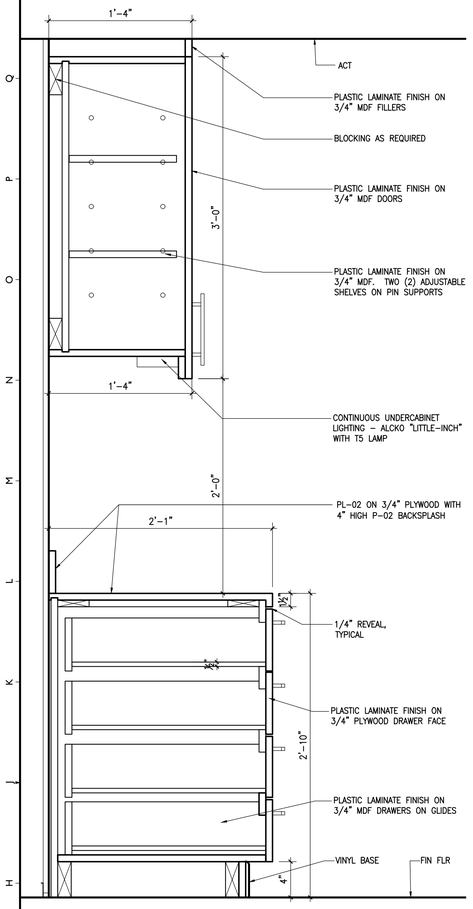

G1 SECTION THRU MILLWORK

1/2"=1'-0"

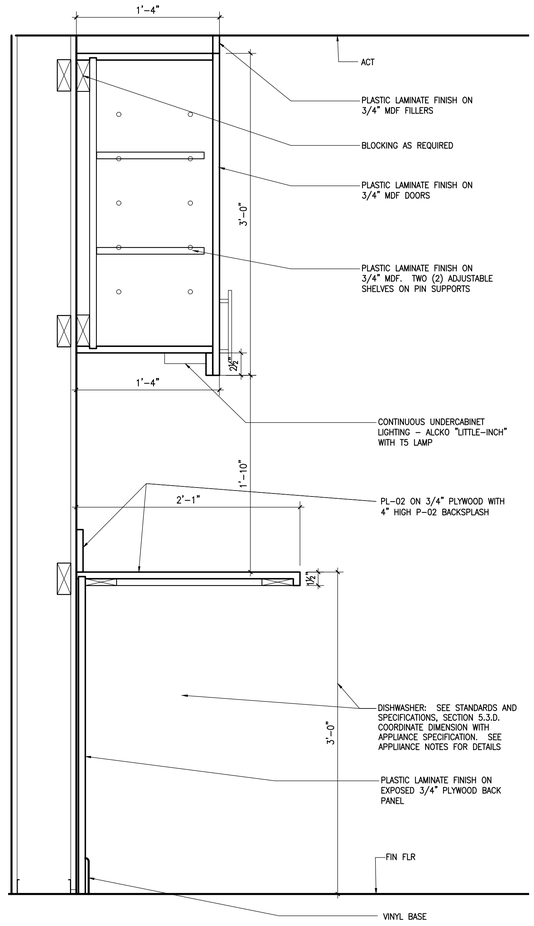

G5 SECTION THRU MILLWORK

1 1/2"=1'-0"

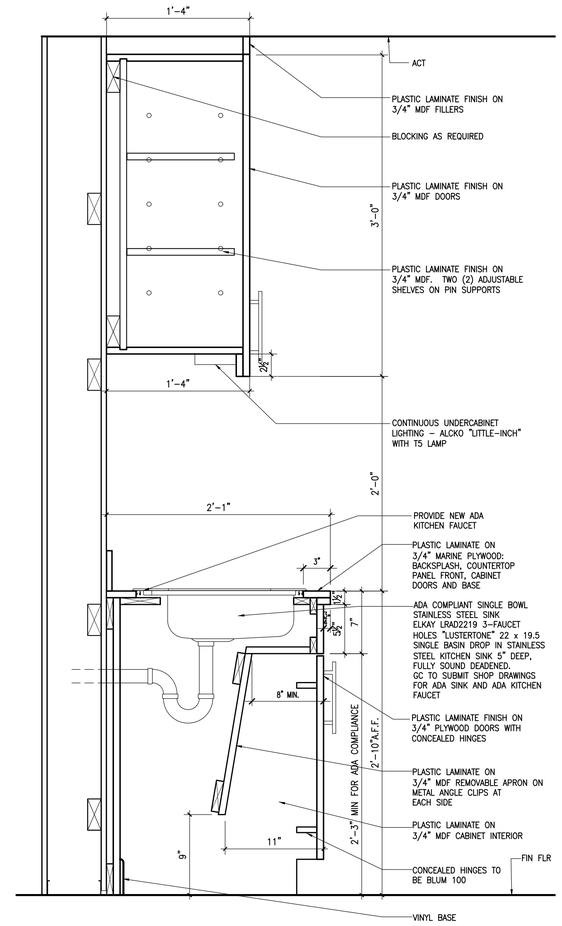

G10 SECTION THRU ADA SINK ENCLOSURE

1 1/2"=1'-0"

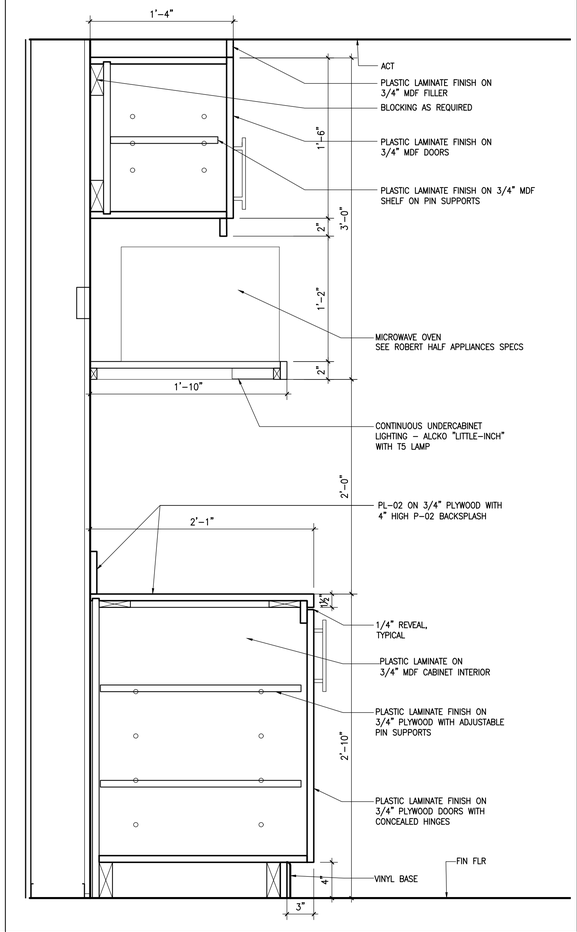

G16 SECTION THRU MILLWORK

1 1/2"=1'-0"

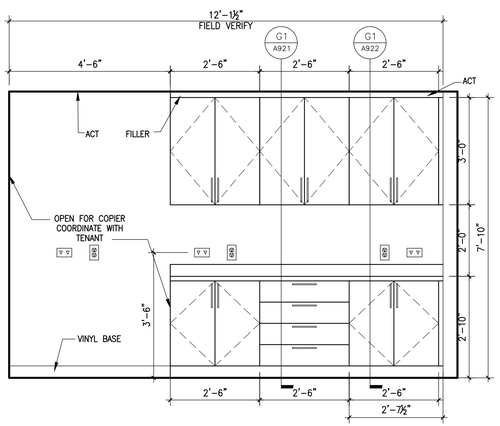

A1 INTERIOR ELEVATION

1/2" = 1'-0"

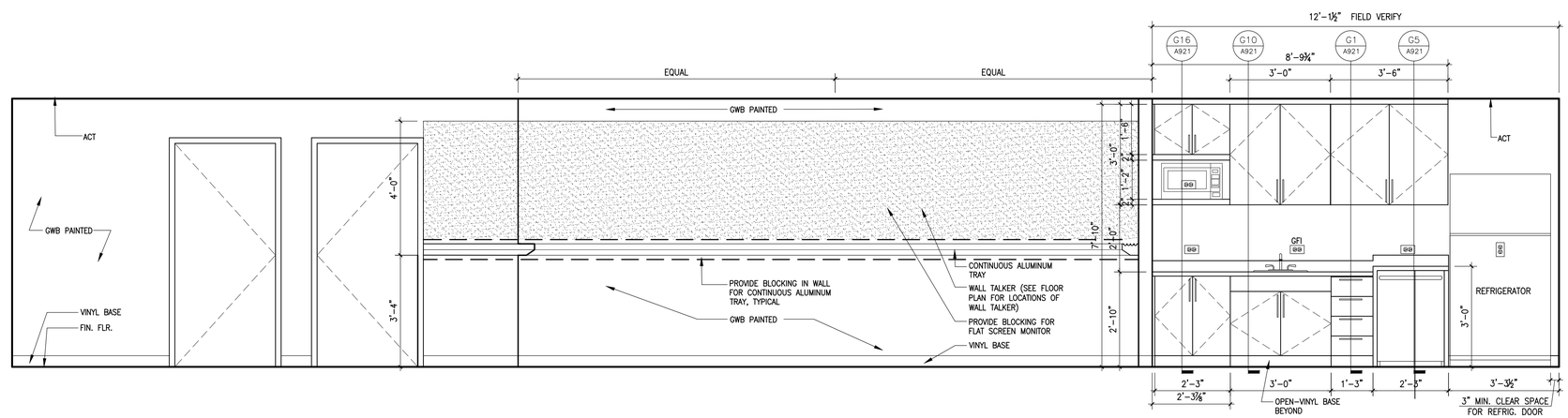

A6 INTERIOR ELEVATION - LONGITUDINAL

1/2" = 1'-0"

PLAN NORTH

LICENSED ARCHITECT STANLEY W. GAWRON 1145 STATE OF MAINE

29 BLACK POINT ROAD
SCARBOROUGH, MAINE 04074
207-883-6307
WWW.GAWRONTURGEON.COM

GAWRON TURGEON ARCHITECTS, P.C.

ROBERT HALF
100 MIDDLE STREET
PORTLAND, MAINE

REVISIONS

#	DATE	DESCRIPTION
1	5.09.17	PROGRESS PRINT
2	6.01.17	PROGRESS PRINT
3	6.06.17	PERMIT DRAWINGS

DATE:	5.09.17
PROJECT #	040617
DRAWN BY:	DLP
CHECKED BY:	MET
DRAWING SCALE	AS NOTED

SHEET TITLE

INTERIOR ELEVATIONS
KITCHEN
MILLWORK

A921

© COPYRIGHT 1985-2008
REPRODUCTION OR REUSE OF THIS DOCUMENT WITHOUT WRITTEN PERMISSION OF GAWRON TURGEON ARCHITECTS IS PROHIBITED