LIGHTING CONTROL SCHEDULE		
ROOM	FIXTURE "ON" BY	FIXTURE "OFF" BY
101 ENTRY	SWITCH	SWITCH/CORNER SENSOR
101A ATM CLOSET	SWITCH	SWITCH/WALL SENSOR
102 SERVICE SPRINKLER	SWITCH	SWITCH
103 BANK BRANCH	SWITCH	SWITCH/CEILING SENSOR
104 CSR OFFICE	SWITCH	SWITCH/CORNER SENSOR
105 BANK BRANCH	SWITCH	SWITCH/CEILING SENSOR
106 CASH ROOM	SWITCH	SWITCH/WALL SENSOR
107 MANAGER	SWITCH	SWITCH/CORNER SENSOR
108 INFORMAL MEETING	SWITCH	SWITCH/CORNER SENSOR
109 RECEPTION	SWITCH	SWITCH/CEILING SENSOR
110 SERVER ROOM	SWITCH	SWITCH/WALL SENSOR
111 HALLWAY	SWITCH	SWITCH/CEILING SENSOR
112 SBA SALES MGR.	SWITCH	SWITCH/CORNER SENSOR
113 CB PRESIDENT	SWITCH	SWITCH/CORNER SENSOR
114 RETAIL SALES/OPS MGR.	SWITCH	SWITCH/CORNER SENSOR
115 CHEIF COMMERCIAL LENDER	SWITCH	SWITCH/CORNER SENSOR
116 BLDG. TEL/DATA RM	SWITCH	SWITCH/WALL SENSOR
117 OPEN OFFICE AREA	SWITCH	SWITCH/CEILING SENSOR
118 WORK ROOM	SWITCH	SWITCH/WALL SENSOR
119 HALLWAY	SWITCH	SWITCH/CEILING SENSOR
120 SECURE FILE ROOM	SWITCH	SWITCH/WALL SENSOR
121 COMMERCIAL LENDER 1	SWITCH	SWITCH/CORNER SENSOR

LIGHTING CONTROL SCHEDULE		
ROOM	FIXTURE "ON" BY	FIXTURE "OFF" BY
122 MOTHER ROOM	SWITCH	SWITCH/WALL SENSOR
123 STORAGE	SWITCH	SWITCH/WALL SENSOR
124 ELECTRICAL ROOM	–	–
125 KITCHEN	SWITCH	SWITCH/WALL SENSOR
126 CAFE	SWITCH	SWITCH/CEILING SENSOR
129 TOILET ROOM	SWITCH	SWITCH/WALL SENSOR
130 COATS	SWITCH	SWITCH/WALL SENSOR
131 LOBBY	SWITCH	SWITCH/CEILING SENSOR
132 CORRIDOR	SWITCH	SWITCH/CEILING SENSOR
133 COATS	SWITCH	SWITCH/WALL SENSOR
134 SMALL CONFERENCE	SWITCH	SWITCH/CORNER SENSOR
135 MEN	SWITCH	SWITCH/CEILING SENSOR
136 WOMEN	SWITCH	SWITCH/CEILING SENSOR
137 MORTG LENDER 2	SWITCH	SWITCH/CORNER SENSOR
138 MORTG LENDER 1	SWITCH	SWITCH/CORNER SENSOR
139 SWING SPACE 1	SWITCH	SWITCH/CORNER SENSOR
140 SWING SPACE 2	SWITCH	SWITCH/CORNER SENSOR
141 SWING SPACE 3	SWITCH	SWITCH/CORNER SENSOR
142 CONFERENCE	SWITCH	SWITCH/CEILING SENSOR
143 CONFERENCE	SWITCH	SWITCH/CEILING SENSOR
144 STAIR	SWITCH	SWITCH

NOTES:

1. SEE E0.0 FOR LEGEND, ABBREVIATIONS AND GENERAL NOTES.

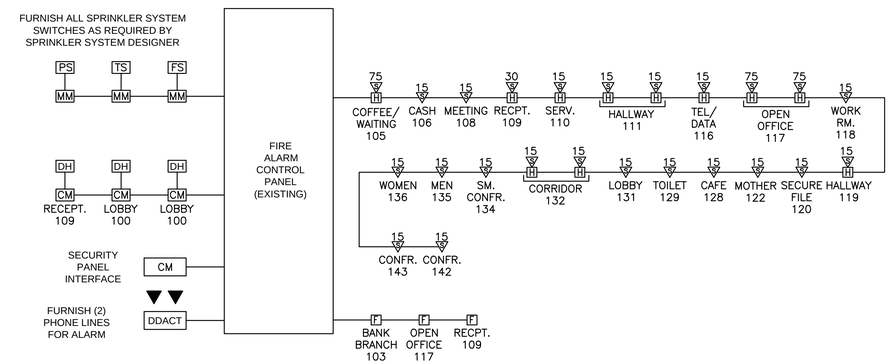

1 FIRE ALARM RISER DIAGRAM

SCALE: NOT TO SCALE

FINAL BID SET
FEBRUARY 4, 2015

WSA
WINTON SCOTT ARCHITECTS
5 Milk Street
Portland, Maine 04101
207 774 4811
www.wintonscott.com

STATE OF MAINE
TIMOTHY D. MATTHEWS
No. 9139
LICENSED
PROFESSIONAL ENGINEER

Branding / Bank Branch Interior Design:
THE ELEMENT GROUP

125 Brewery Lane
Suite #9
Portsmouth, NH 03801
T. 603.319.8951

Structural Engineering:
STRUCTURAL INTEGRITY ENGINEERS

77 Oak Street
Portland, ME 04101
T. 207.774.4614

HVAC & plumbing Engineering:
MECHANICAL SYSTEMS ENGINEERS

Royal River Center, Unit 10
10 Forest Falls Drive
Yarmouth, ME 04096
T. 207.846.1441

Electrical Engineering:
SWIFTCURRENT ENGINEERING

Royal River Center, Unit 4B
10 Forest Falls Drive
Yarmouth, ME 04096
T. 207.847.9280

Northeast BANK

Portland Branch
27 Pearl Street
1st Floor Tenant Space
Portland, Maine

ISSUED FOR REVIEW
NOT FOR CONSTRUCTION
January 30th, 2015

ELECTRICAL LIGHTING CONTROLS & FIRE ALARM RISER DIAGRAM

Scale: As Noted

E2.2