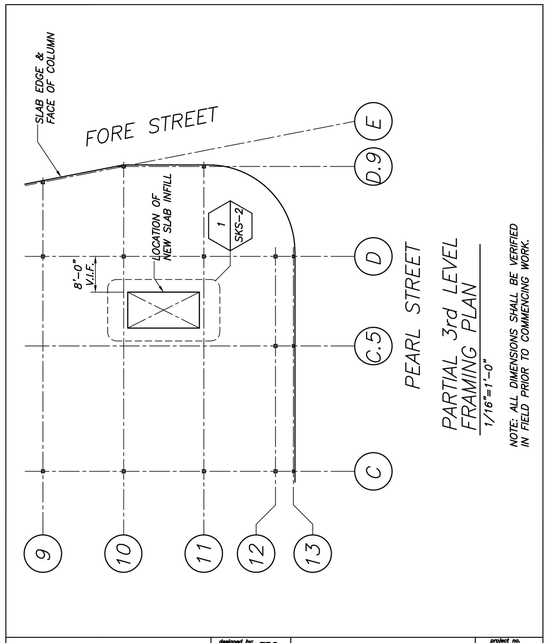

PARTIAL 3rd LEVEL FRAMING PLAN
1/16"=1'-0"

NOTE: ALL DIMENSIONS SHALL BE VERIFIED IN FIELD PRIOR TO COMMENCING WORK.

BECKER structural engineers, inc.
19 Commercial Street, Portland, ME 04101-4701
Tel 207-879-1838 Fax 207-879-1822
info@beckerstructural.com www.beckerstructural.com

designed by: TPG
drawn by: MC
checked by: TMN
scale: NOTED
date: 04/11/03

CUSTOM HOUSE
SQUARE SLAB INFILL
PORTLAND, MAINE

project no. WO 1026.00

SKS-1

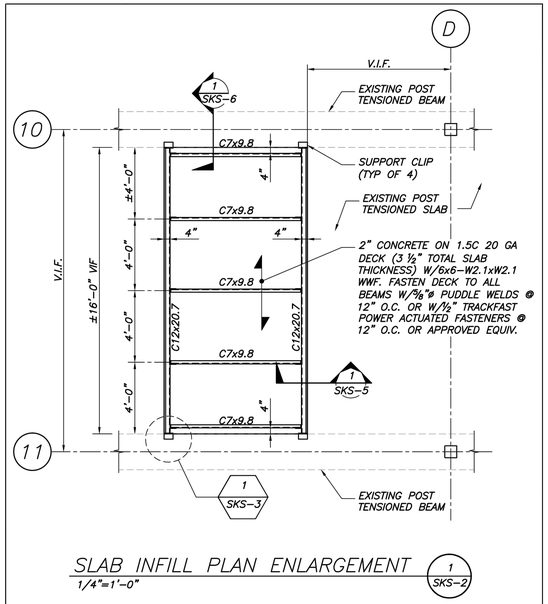

SLAB INFILL PLAN ENLARGEMENT
1/4"=1'-0"
1 SKS-2

NOTE: ALL DIMENSIONS SHALL BE VERIFIED IN FIELD PRIOR TO COMMENCING WORK.

BECKER structural engineers, inc.
19 Commercial Street, Portland, ME 04101-4701
Tel 207-879-1838 Fax 207-879-1822
info@beckerstructural.com www.beckerstructural.com

designed by: TPG
drawn by: MC
checked by: TMN
scale: NOTED
date: 04/11/03

CUSTOM HOUSE
SQUARE SLAB INFILL
PORTLAND, MAINE

project no. WO 1026.00

SKS-2

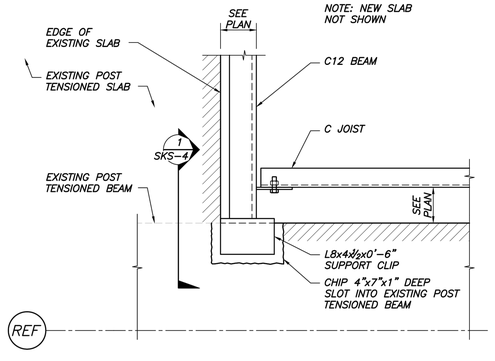

TYP PLAN DETAIL @ SUPPORT CLIP
1 1/2"=1'-0"
1 SKS-2

NOTES:
1. DO NOT CONTACT EXISTING REINFORCING OR TENDONS.
2. IF REINFORCEMENT OR STRANDS ARE EXPOSED IN EXISTING POST TENSIONED CONCRETE ELEMENTS NOTIFY ENGINEER PRIOR TO CONTINUING WITH WORK.

BECKER structural engineers, inc.
19 Commercial Street, Portland, ME 04101-4701
Tel 207-879-1838 Fax 207-879-1822
info@beckerstructural.com www.beckerstructural.com

designed by: TPG
drawn by: MC
checked by: TMN
scale: NOTED
date: 04/11/03

CUSTOM HOUSE
SQUARE SLAB INFILL
PORTLAND, MAINE

project no. WO 1026.00

SKS-3

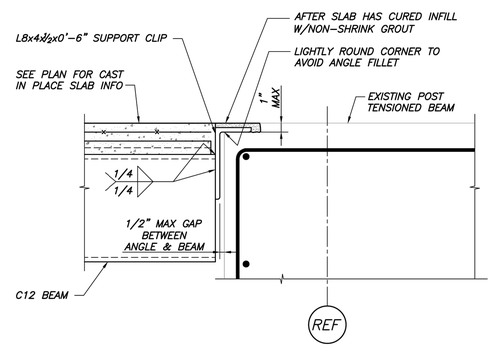

TYP SECTION OF SUPPORT CLIP
1 1/2"=1'-0"
1 SKS-3

NOTES:
1. DO NOT CONTACT EXISTING REINFORCING OR TENDONS.
2. IF REINFORCEMENT OR STRANDS ARE EXPOSED IN EXISTING POST TENSIONED CONCRETE ELEMENTS NOTIFY ENGINEER PRIOR TO CONTINUING WITH WORK.

BECKER structural engineers, inc.
19 Commercial Street, Portland, ME 04101-4701
Tel 207-879-1838 Fax 207-879-1822
info@beckerstructural.com www.beckerstructural.com

designed by: TPG
drawn by: MC
checked by: TMN
scale: NOTED
date: 04/11/03

CUSTOM HOUSE
SQUARE SLAB INFILL
PORTLAND, MAINE

project no. WO 1026.00

SKS-4

DEMOLITION NOTES:

ARCHITECTURAL & STRUCTURAL GENERAL NOTES

DEMOLITION PLANS INDICATE GENERAL AREAS AND CONDITIONS WHICH REQUIRE DEMOLITION BY MEANS OF A GRAPHIC LEGEND. THE SCOPE OF DEMOLITION WITHIN THESE AREAS SHALL INCLUDE BUT NOT BE LIMITED TO THE FOLLOWING:

1. ALL WORK SHALL BE IN ACCORDANCE WITH ALL FEDERAL, STATE AND LOCAL BUILDING CODES AND LOCAL REGULATIONS.

2. INFORMATION ON THESE DRAWINGS MAY NOT ENTIRELY REFLECT ALL OF THE ON SITE AS-BUILT CONDITIONS. THE CONTRACTOR SHALL VERIFY ALL CONDITIONS INDICATED ON THE DRAWINGS WITH AN EXISTING FIELD CONDITION WALK-THRU AND REPORT ANY PERTINENT INCONSISTENCIES, ERRORS, AND/OR OMISSIONS TO THE ARCHITECT IMMEDIATELY UPON DISCOVERY, AND PRIOR TO THE COMMENCEMENT OF ANY WORK. REFER TO REFERENCE DOCUMENTS FOR ADDITIONAL INFORMATION.

3. THE CONTRACTOR SHALL FIELD VERIFY THE LOCATION OF STRUCTURAL MEMBERS AT THE PROPOSED ROOF AND FLOOR OPENINGS (WHERE APPLICABLE). THE CONTRACTOR SHALL PROVIDE FIELD SURVEY INFORMATION FOR REVIEW BY THE ARCHITECT AND THE TENANT PRIOR TO PERFORMING DEMOLITION.

4. THE CONTRACTOR SHALL REMOVE ONLY THOSE PORTIONS OF THE EXISTING CONSTRUCTION AS INDICATED ON THE DRAWINGS AND AS REQUIRED TO ACCOMPLISH THE FINAL DESIGN INTENT.

5. THE CONTRACTOR SHALL PROTECT ALL ADJACENT CONSTRUCTION THAT IS TO REMAIN, AND SHALL REPAIR AND PATCH ANY DAMAGED EXISTING CONSTRUCTION. REPAIRS SHALL MATCH EXISTING ADJACENT CONSTRUCTION.

6. CONTRACTOR SHALL COORDINATE AND CONDUCT A SITE WALK-THRU WITH THE ARCHITECT, THE STRUCTURAL AND M/E/P CONSULTANTS, AND ALL DEMOLITION CONTRACTORS PRIOR TO COMMENCEMENT OF THE WORK.

7. CONTRACTOR IS TO PROVIDE A DUMPSTER FOR REFUSE TO BE REGULARLY REMOVED. AT THE END OF THE JOB, THE PREMISES, INCLUDING THE IMMEDIATE SURROUNDING AREAS, SHALL BE BROOM CLEANED. ALL DEBRIS SHALL BE TRUCKED AWAY.

8. OWNER RESERVES THE RIGHT TO SALVAGE ANY MATERIALS DEMOLISHED WITH THE EXCEPTION OF ANY ITEMS SPECIFIED TO BE SAVED FOR REUSE.

9. G.C. SHALL BE RESPONSIBLE FOR CLEARING, CLEANING AND MAINTAINING A SAFE AND SECURE PASSAGE WAY FOR PUBLIC USE DURING DAY TIME OPERATION FOR THOSE TENANTS REMAINING OPEN DURING CONSTRUCTION PHASE.

10. CONTRACTOR IS RESPONSIBLE FOR OBTAINING AND PAYING FOR ALL PERMITS AND CERTIFICATES.

11. CONTRACTOR IS RESPONSIBLE FOR DISCONNECTING, REMOVING AND / OR CAPPING UTILITIES THAT ARE SCHEDULED TO BE ABANDONED IN PLACE.

12. CONTRACTOR IS RESPONSIBLE TO PROTECT AND MAINTAIN ALL FIRE RATED ASSEMBLIES. ASSEMBLIES SHALL BE PATCHED TO MAINTAIN FIRE RATING INTEGRITY.

13. CONTRACTOR IS RESPONSIBLE FOR CUTTING NEW HOLES FOR PENETRATIONS REQUIRED BY OTHER WORK, EXCEPT AS INCLUDED IN THE WORK OF OTHER TRADES.

14. THE CONTRACTOR SHALL CAREFULLY EXAMINE ALL OF THE CONTRACT DOCUMENTS AND EXSTING CONDITIONS AT THE BUILDING SITE FOR REQUIREMENTS WHICH AFFECT THE DEMOLITION WORK. CERTAIN ITEMS OF HEATING, VENTILATING, AIR CONDITIONING, ELECTRICAL, FIRE PROTECTION AND OTHER EQUIPMENT IDENTIFIED IN THE CONTRACT DOCUMENTS OR BY THE ARCHITECT IN THE FIELD SHALL REMAIN IN PLACE FOR FUTURE SERVICE AND SHALL BE PROTECTED.

15. PLANS FOR SPRINKLER SYSTEM MUST BE SUBMITTED TO AND APPROVED BY THE NORTHBOROUGH FIRE DEPARTMENT OR LOCAL AUTHORITY HAVING JURISDICTION BEFORE EQUIPMENT IS INSTALLED.

16. THESE CONTRACT DOCUMENTS DO NOT INCLUDE OR IMPLY ANY DESIGN OR SPECFICATION RELATING TO THE IDENTIFICATION OR TREATMENT OF HAZARDOUS MATERIALS. HAZARDOUS MATERIAL REMOVAL SHALL BE HANDLED UNDER SEPARATE CONTRACT. NOTIFY THE OWNER IMMEDIATELY UPON DISCOVERY OF ANY HAZARDOUS MATERIAL. DOCUMENT THE SCOPE AND NATURE OF THE MATERIAL WHICH APPEAR TO BE PRESENT AND REQUEST INSTRUCTIONS BEFORE PROCEEDING WITH THE WORK.

17. MAINTAIN AND CONTINUE USE OF ALL UTILITIES EXCEPT THOSE REQUIRING REMOVAL OR RELOCATION. DO NOT INTERRUPT UTILITIES SERVING OCCUPIED AREAS WITH OUT OWNER'S APPROVAL. PROVIDE TEMPORARY SERVICE AS REQUIRED.

18. TAKE SPECIAL CARE TO CONTROL DUST AND NOISE AND AVOID DISTURBANCE OF NEARBY PERSONS OR PROPERTY. OBTAIN OWNERS APROVAL OF DEMOLITION SCHEDULE AND MEANS, METHODS AND TECHNIQUES OF DUST AND NOISE CONTROL.

19. CONTRACTOR SHALL SAWCUT CONCRETE PRIOR TO ANY FLOOR REMOVAL.

20. SLAB DEMOLITION NOTE:
EXISTING SLAB IS ASSUMED TO BE SOIL SUPPORTED, CONDITIONS SHALL BE FIELD VERIFIED. SHOULD OTHER THAN NORMAL SOIL SUPPORTED SLAB BE ENCOUNTEDERED, WORK SHALL CEASE UNTIL A REGISTERED STRUCTURAL ENGINEER REVIEWS CONDITIONS AND PROVIDED A BASIS ON HOW TO PROCEED.

21. DEMOLITION SHALL INCLUDE BUT NOT BE LIMITED TO THE FOLLOWINGITEMS TO COMPLETE WORK:

A. REMOVE ALL INTERIOR NON-STRUCTURAL PARTITIONS INDICATED, INCLUDING ALL DOORS, FRAMES, WINDOWS, HARDWARE AND FINISHES. REMOVE ALL INTERIOR WALLS AND ASSOCIATED MATERIALS UNLESS OTHERWISE NOTED.

B. REMOVE ALL CEILINGS, SUSPENDED AND APPLIED, WITHIN AREAS INDICATED TO BE DEMOLISHED INCLUDING FURRING, HANGERS AND ACCESSORIES.

C. REMOVED EXISTING CONSTRUCTION AS REQUIRED FOR NEW CHASES FOR MECHANICAL AND ELECTRICAL WORK. HVAC IS DESIGN BUILD.

D. REMOVE EXISTING FLOOR FINISHES INCLUDING, BUT NOT LIMITED TO CARPET, CERAMIC TILE, QUARRY TILE AND VINYL FLOORING.

E. REMOVE ALL FURNISHINGS, EQUIPMENT, SHELVING, COUNTERTOPS, CABINETS AND ACCESSORIES IN AREAS WHERE DEMOLITION IS INDICATED OR REQUIRED.

F. REMOVE ALL TOILET PARTITIONS AND ACCESSORIES IN AREAS WHERE DEMOLITION IS INDICATED OR REQUIRED.

G. REMOVE ALL WINDOW SHADES, BLINDS, DRAPERIES AND HARDWARE IN AREAS WHERE DEMOLITION IS INDICATED OR REQUIRED.

H. PROVIDE NEW OPENINGS AS REQUIRED FOR NEW WORK.

I. PROVIDE NEW OPENINGS AS REQUIRED FOR WINDOWS, DOORS AND ENTRANCES INDICATED.

J. REMOVE SIGNAGE AS INDICATED OR REQUIRED FOR INSTALLATION OF NEW WORK.

K. REMOVE ALL NON FIRE RESTISTANT TREATED BLOCKING AND ALL BLOCKING NOT REQUIRED FOR NEW WORK

22. PREPARE EXISTING FLOOR SLAB FOR NEW FLOOR FINISHES. IF REQUIRED DUE TO EXISTING CONDITIONS, SHOT BLAST EXISTING CONCRETE SLABS TO REMAIN. PROVIDE CEMENTITIOUS UNDERLAYMENT AS REQUIRED TO ACHIEVE FLOOR LEVELNESS REQUIREMENTS.

23. REMOVE SPRAYED ON INSULATION FROM THIRD FLOOR CONCRETE CEILING AREAS. TO BE EXPOSED TO VIEW IN NEW WORK.

PLUMBING

1. REMOVE ALL SUPPLY AND WASTE PIPING VENTS, FIXTURES, FITTINGS, VALVES AND ACCESSORIES NOT INDICATED TO REMAIN AND NOT REQUIRED FOR INSTALLATION OF NEW WORK. CAP LINES BELOW GRADE WHERE APPLICABLE.

2. REMOVE ALL GAS PIPING, FITTINGS, VALVES, HANGERS AND ACCESSOREIS AS INDICATED OR REQUIRED FOR INSTALLATION OF NEW WORK.

FIRE PROTECTION

1. EXISTING SPRINKLER SYSTEM TO REMAIN. PARTIAL DEMOLITION MAY BE REQUIRED FOR NEW WORK.

2. REMOVE ALL SPRINKLER HEADS, PIPING, VALVES, HANGERS AND ACCESSORIES AS REQUIRED FOR INSTALLATION OF NEW WORK.

3. SPRINKLER SYSTEM FOR BUILDING AND ALL OTHER AREAS OUTSIDE THE SCOPE OF THIS PROJECT SHALL REMAIN IN OPERATION. CONTRACTOR SHALL VERIFY THERE ARE NO ACTIVE CONNECTIONS PRIOR TO START OF WORK AND SHALL KEEP SYSTEM OPERATIONAL AFTER HOURS UNLESS OTHERWISE APPROVED BY TENANT/ LL AND/OR AHJ.

HEATING VENTILATING AND AIR CONDITIONING

1. EXISTING ROOFTOP UNITS TO REMAIN AND BE REUSED FOR NEW WORK.

2. REMOVE ALL DUCTWORK, DIFFUSERS, THERMOSTATS WIRING AND ACCESSORIES, AS REQUIRED FOR INSTALLATION OF NEW WORK.

3. REMOVE ALL RADIATION, VALVES, FITTINGS, HANGERS AND ACCESSORIES, CONDENSATE PIPING, PUMBS AND DRAINS NOT INDICATED TO REMAIN AND NOT REQUIRED FOR NEW WORK, OR AS REQUIRED FOR INSTALLATION OF NEW WORK.

ELECTRICAL

1. EXISTING ELECTRICAL PANELS TO REMAIN. REMOVE ALL ELECTRICAL POWER AND LIGHTING DISTRIBUTION IN ITS ENTIRETY INCLUDING TRANSFORMERS, WIREWAYS, CONDUIT, WIRING, SWITCHES, BOXES, OUTLET FIXTURES AND ACCESSORIES NOT INDICATED TO REMAIN, AND NOT REQUIRED FOR NEW WORK OR AS REQUIRED FOR INSTALLATION OF NEW WORK.

2. RELOCATE EXISTING TELEPHONE PANEL. REMOVE ALL TELEPHONE AND INTERCOM EQUIPMENT, WIRING, SPEAKERS AND ACCESSORIES AS REQUIRED FOR INSTALLATION OF NEW WORK. VERIFY WITH TENANT PHONE AND DATE REQUIREMENTS PRIOR TO DEMOLITION.

3. EXISTING FIRE ALARM PANEL TO BE REUSED. REMOVE ALL FIRE ALARM WIRING, FIXTURES AND ACCESSORIES NOT INDICATED TO REMAIN AND AS REQUIRED FOR INSTALLATION OF NEW WORK. LOCATE LANDLORD FIRE ALARM SYSTEM CONNECTION POINTS & PROTECT FOR NEW WORK.

4. SALVAGE FOR RE-USE ALL SECTIONS OF DIRECT/INDIRECT SUSPENDED LIGHTING. SALVAGE FOR REUSE ALL 2 X 2 COVE LIGHTS TYPICALLY USED ON THE THIRD FLOOR FOR INCORPORATION INTO NEW WORK. SALVAGE OTHER ITEMS AT DISCRETION OF ELECTRICAL DESIGN-BUILDER, AS APPROVED BY OWNER AND LANDLORD.

STRUCTURAL

1. THIS IS A POST TENSIONED CONCRETE SLAB SYSTEM. IN NO EVENT SHALL THE SLAB BE CUT, DRILLED OR SHALL FASTENERS DRILLED INTO THE CONCRETE WITHOUT PRIOR APPROVAL OF THE STRUCTURAL ENGINEER AS TO TYPE, SIZE QUANTITY AND LOCATION.

KEYNOTES:

1. CUT AND REMOVE SLAB INFILL AREA, SEE SKETCH FOR INSTALLED CONDITION REMOVE ONLY THOSE ITEMS INSTALLED IN THESE DETAILS, DO NOT OVERCUT OR CUT INTO SLAB DEEPER THAN AS REPRESENTED IN THESE SKETCHES TO REMOVE THESE ITEMS, OPENING TO BE LEFT SMOOTH, CLEAN AND READY FOR FINISH. SEE SKS-1 – 4 FOR CONDITIONS EXPECTED.

2. REMOVE ALL BLOCKING AND FINISHES FROM COLUMNS, PATCH AND REPAIR AND GRIND EDGES SMOOTH, COLUMNS TO REMAIN AND BE EXPOSED IN FINAL CONSTRUCTION. TYPICAL ALL COLUMNS

3. DEMOLISH WINDOW SILL AND GYPSUM ALONG EXTERIOR WALL. DEMOLISH BLINDS. FURRING MAY REMAIN AT CONCRETE KNEEWALL.

4. DEMOLISH BATHROOM FIXTURES, PARTITIONS AND ANY WALL MOUNTED ITEMS. BATROOM FINISHES TO BE REMOVED INCLUDE CEILING, FLOORS AND WALLS AS SHOWN ON PLAN.

5. REMOVE ALL MILLWORK AND KITCHEN PLUMBING ETC. SALVAGE DISHWASHER AND REFRIGERATOR TO INCORPORATE INTO NEW WORK

6. DEMOLISH HOT WATER HEATER , SINK AND OTHER ITEMS. SLAB CORE TO BE USED FOR PLUMBING DRAINS IN NEW WORK.

7. DEMOLISH ALL FLOORING, WALLS CEILING LIGHTING, DOORS AND EQUIPMENT NOT NOTED BE TO BE SALVAGED.

LEGEND

- EXISTING TO REMAIN
- EXISTING TO BE REMOVED
- EXISTING CONCRETE SLAB TO BE REMOVED FOR NEW WORK.

CHARETTE DESIGN
ARCHITECTURE • SUSTAINABILITY
142 HIGH STREET
SUITE 501-C
PORTLAND, MAINE 04101
207.831.7757
CHARETTE-DESIGN.COM

LICENSED ARCHITECT JOHN C. CHARETTE NO. 2956 STATE OF MAINE

cashstar™

25 PEARL STREET

PORTLAND, MAINE

#	DATE	DESCRIPTION

REVISIONS

Date Issued 5.6.14
Project Number 1410B
Drawing Scale AS NOTED

SHEET NAME
DEMOLITION NOTES

Drawn By
Checked By

D1.1

COPYRIGHT: Reuse or reproduction of the contents of this document is not permitted without written permission of CHARETTE DESIGN, I