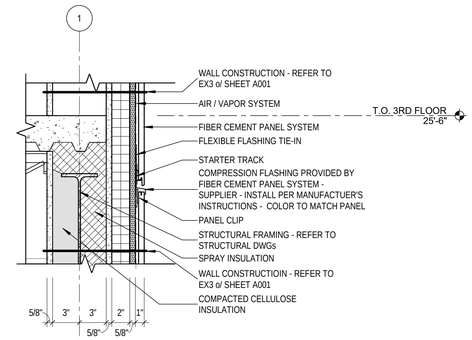


## N1 WALL SECTION DETAIL - 4

1 1/2" = 1'-0"

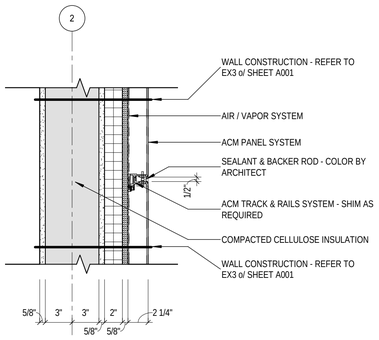


## N6 WALL SECTION DETAIL - 5

1 1/2" = 1'-0"

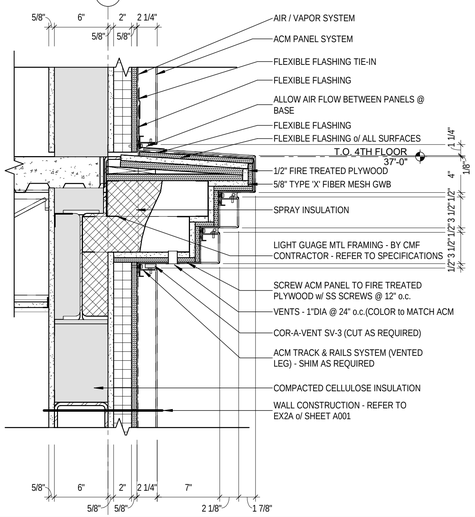


## G1 WALL SECTION DETAIL - 13

1 1/2" = 1'-0"

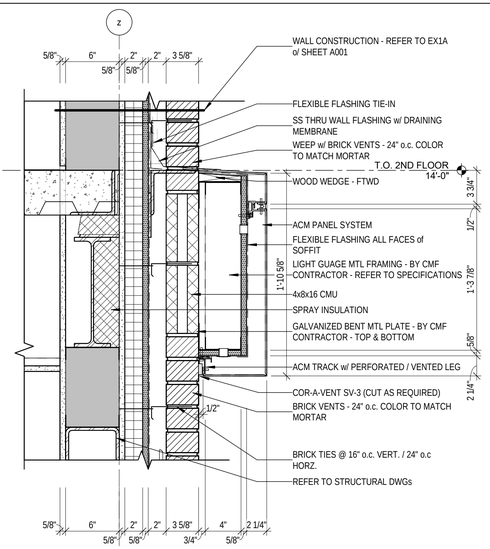


## G6 WALL SECTION DETAIL - 8

1 1/2" = 1'-0"

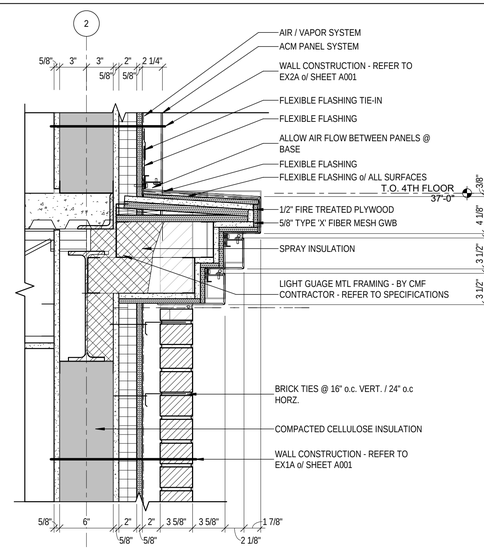


## A1 WALL SECTION - 5 - Callout 1

1 1/2" = 1'-0"

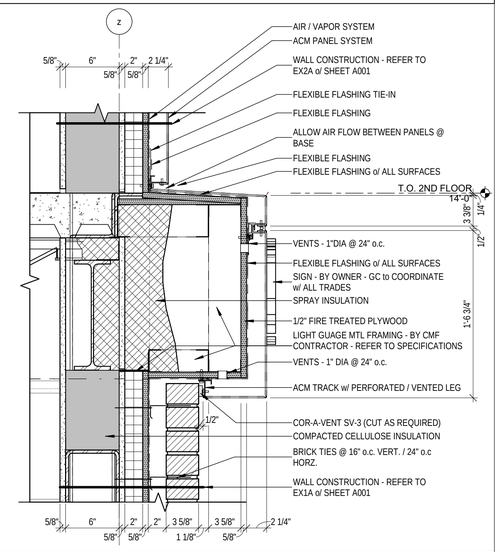


## A6 WALL SECTION - 7 - Callout 1

1 1/2" = 1'-0"

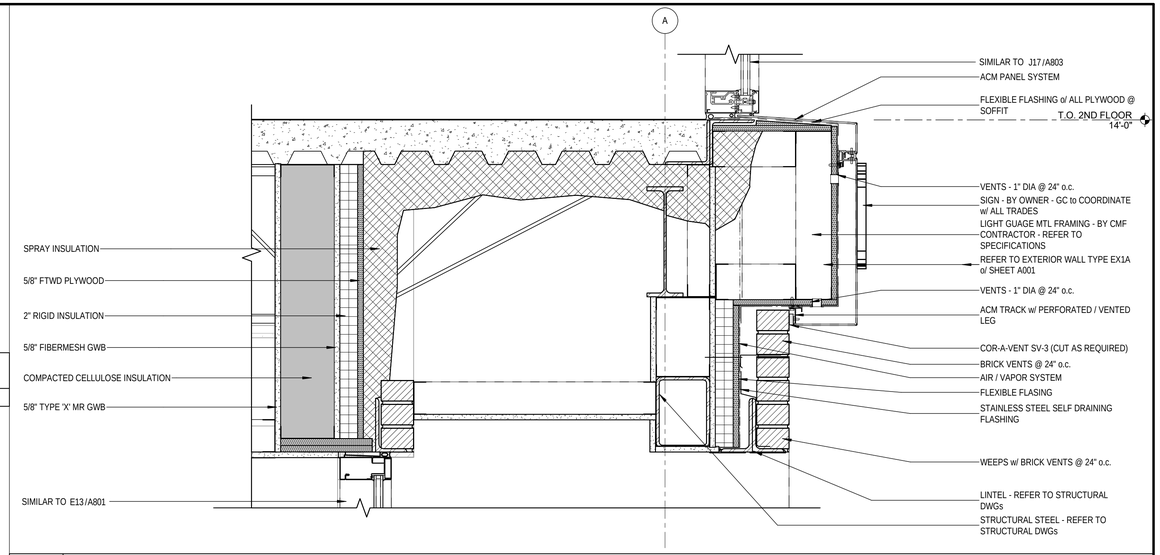


## L11 WALL SECTION DETAIL - 1

1 1/2" = 1'-0"

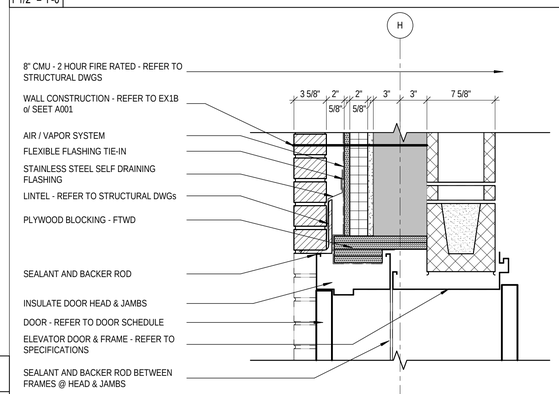


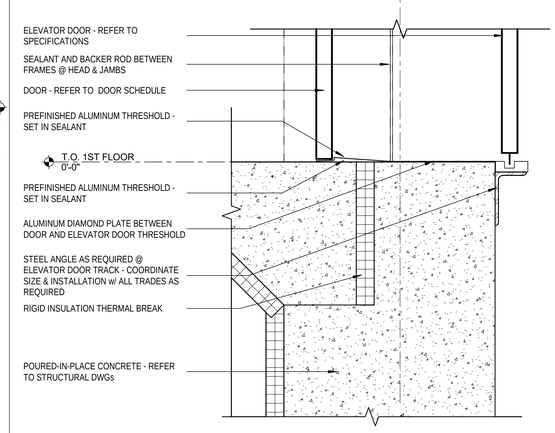


## A11 WALL SECTION DETAIL - 11

1 1/2" = 1'-0"

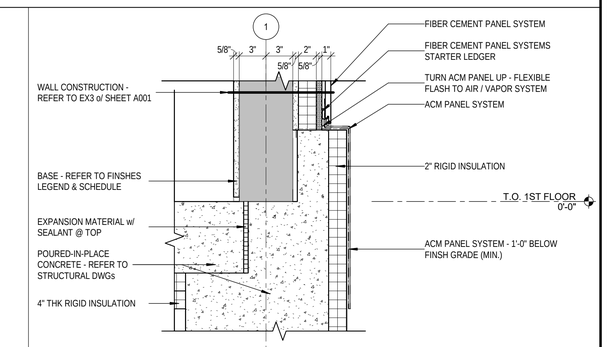


## G13 WALL SECTION DETAIL - 3

1 1/2" = 1'-0"

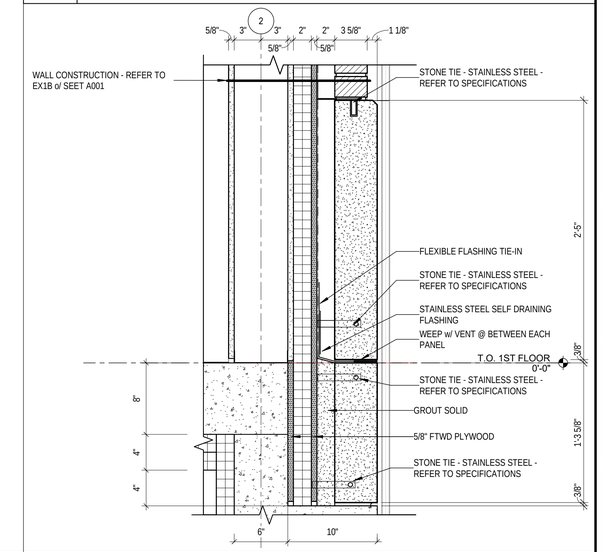


## A13 WALL SECTION DETAIL - 9

1 1/2" = 1'-0"

LICENSED ARCHITECT STANLEY W. GAWRON 1145 STATE OF MAINE


29 BLACK POINT ROAD
SCARBOROUGH, MAINE 04074
207-883-6307
WWW.GAWRONTURGEON.COM

GAWRON TURGEON ARCHITECTS, P.C.


# cPort Credit Union

35 Middle& 50 India Street

Portland, Maine

REVISIONS

| # | DATE | DESCRIPTION |
|---|---|---|
| A | 09.14.17 | PERMIT SET |

| | |
|---|---|
| DATE: | 09.14.17 |
| PROJECT # | 010416 |
| DRAWN BY: | DLP |
| CHECKED BY: | SWG |
| DRAWING SCALE | 1 1/2" = 1'-0" |

SHEET TITLE

SECTION DETAILS

A603


© COPYRIGHT 1985-2017
REPRODUCTION OR REUSE OF THIS DOCUMENT WITHOUT WRITTEN PERMISSION OF GAWRON ARCHITECTS IS PROHIBITED


9/18/2017 8:14:21 AM DLP