COPYRIGHT: Reuse or reproduction of the contents of this document is not permitted without written permission of Structural Integrity Consulting Engineers Inc.

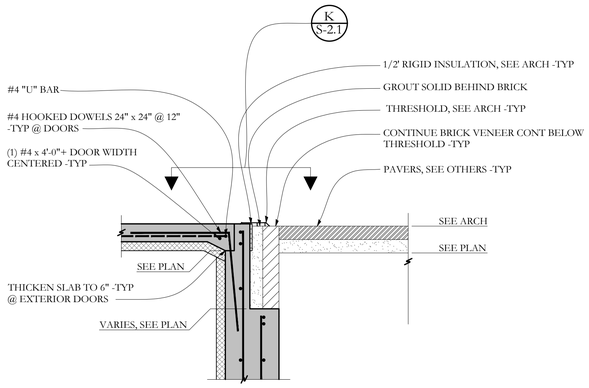

SECTION J S-2.1 3/4"=1'-0

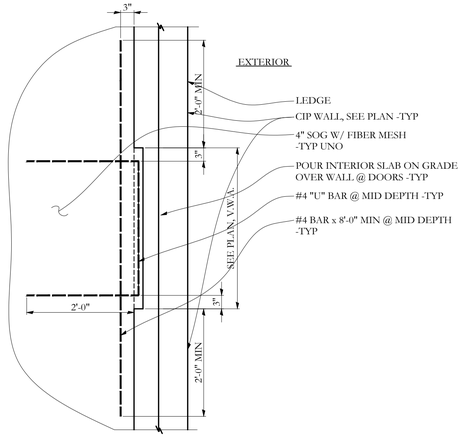

SECTION K S-2.1 3/4"=1'-0

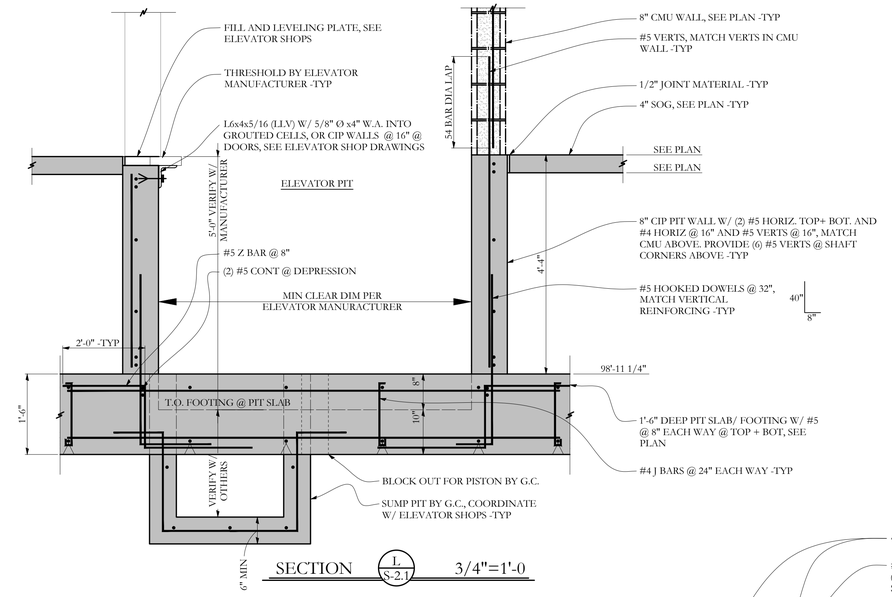

SECTION L S-2.1 3/4"=1'-0

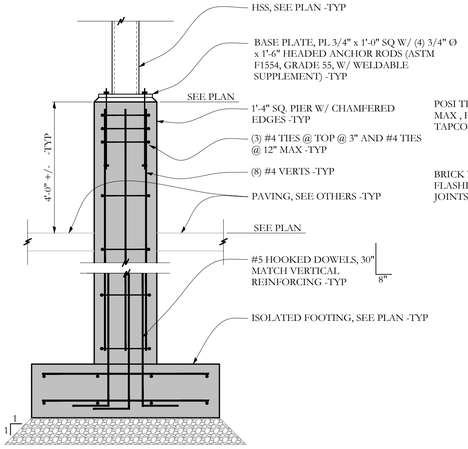

SECTION E S-2.1 3/4"=1'-0

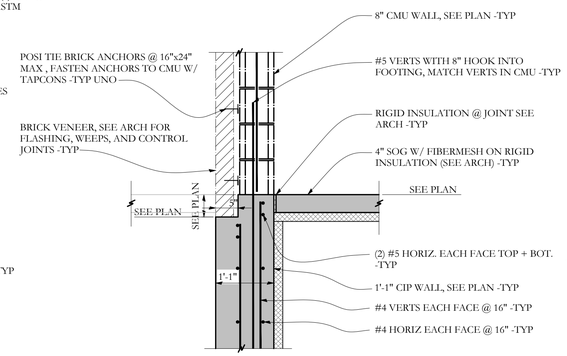

SECTION F S-2.1 3/4"=1'-0

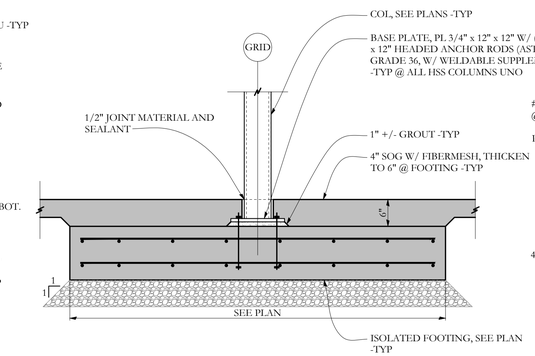

SECTION G S-2.1 3/4"=1'-0

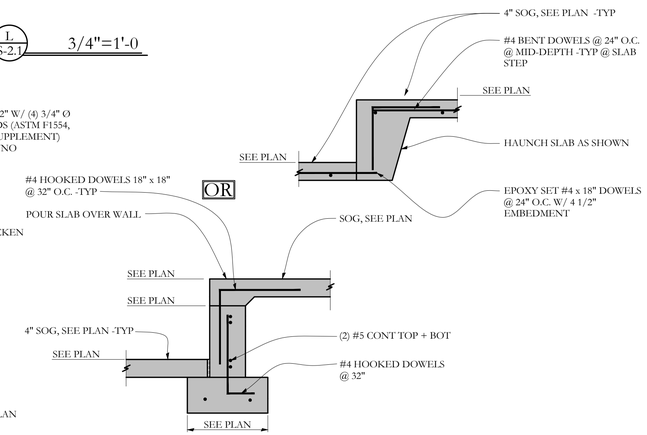

SECTION H S-2.1 3/4"=1'-0

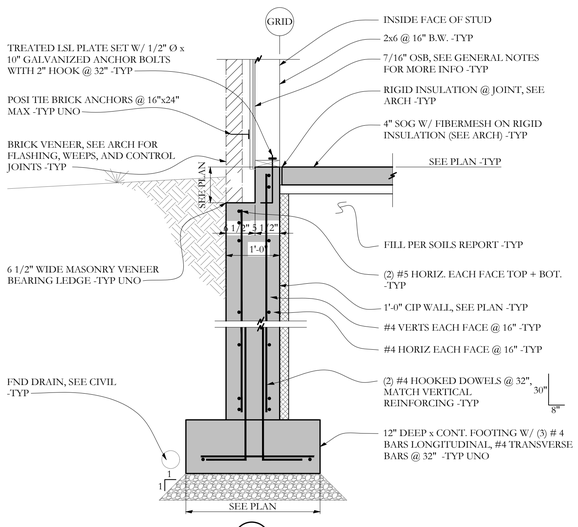

SECTION A S-2.1 3/4"=1'-0

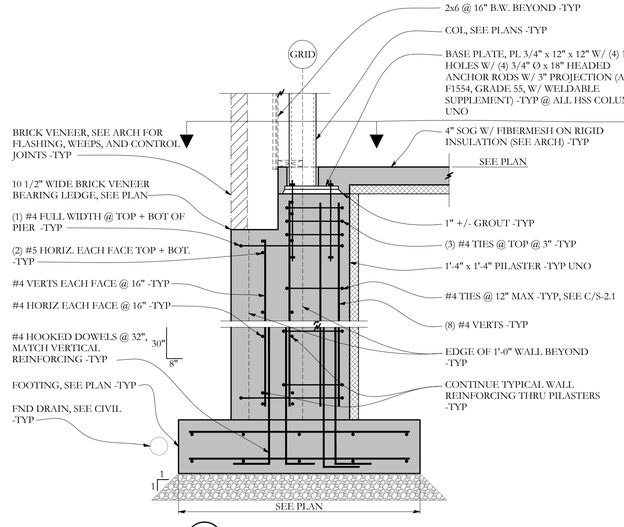

SECTION B S-2.1 3/4"=1'-0

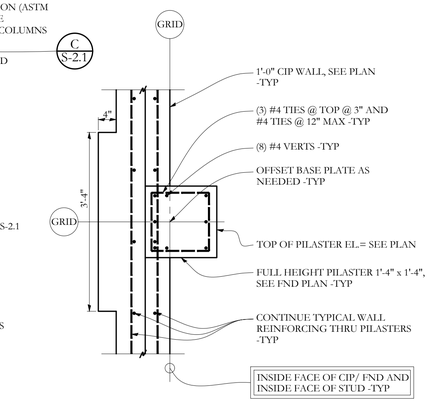

SECTION C S-2.1 3/4"=1'-0

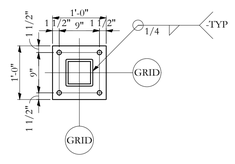

TYPICAL BASE PLATE @ HSS COLUMNS UNO:
PL 3/4" x 12" x 12" W/ (4) 1" Ø HOLES W/ (4) 3/4" Ø x 18" HEADED ANCHOR RODS W/ 3" PROJECTION (ASTM F1554, GRADE 36, W/ WELDABLE SUPPLEMENT) -TYP @ ALL HSS COLUMNS UNO
*ALL ANCHORS OUTSIDE OF BUILDING ENVELOPE TO BE HOT DIPPED GALVANIZED -TYP

SECTION D S-2.1 3/4"=1'-0

TYPICAL HSS COLUMN BASE PLATE UNO

STATE OF MAINE
AARON C. JONES
No. 10968
LICENSED
PROFESSIONAL ENGINEER
November 18, 2016

77 Oak Street
Portland, ME, 04101
p. 207-774-4614
f. 866-793-7835
www.structuralinteg.com

BUILD WITH CONFIDENCE

© 2016 Structural Integrity Consulting Engineers, Inc.

Structural Integrity Consulting Engineers

OWNER
INDIA/ NEWBURY RESIDENCES, LLC.
PROJECT NAME
62 INDIA ST
Portland, Maine

DRAWN BY
JCS
SHEET TITLE
SECTIONS

ISSUE DATE
11.18.16
SHEET SCALE
3/4"=1'-0"

S-2.1

PROJECT NO.
16-0022