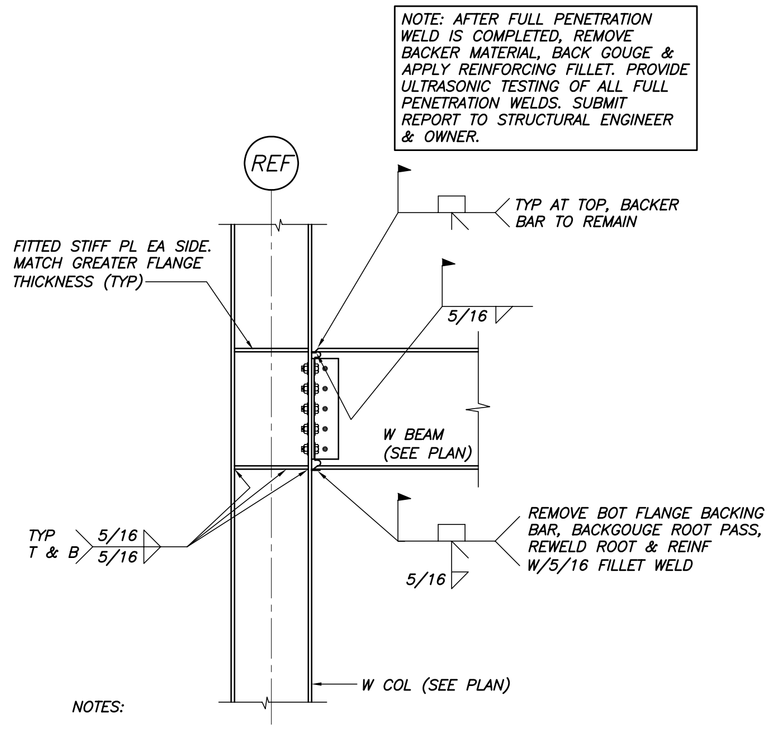

NOTES:

1. ULTRASONIC TESTING OF ALL WELDS IS REQUIRED. SUBMIT REPORT TO STRUCTURAL ENGINEER AND OWNER.
2. WELD METAL TO HAVE A MIN CHARPY V–NOTCH VALUE OF 20 ft/lbs AT 0° F.
3. ALL WELDS & WELD PREPARATION SHALL BE PERFORMED IN ACCORDANCE WITH THE AISC SEISMIC PROVISIONS, 2002 EDITION, (ANSI/AISC 341–05).

TYP MOMENT CONN DETAIL @ NEW COLUMN, U.N.O.

N.T.S.

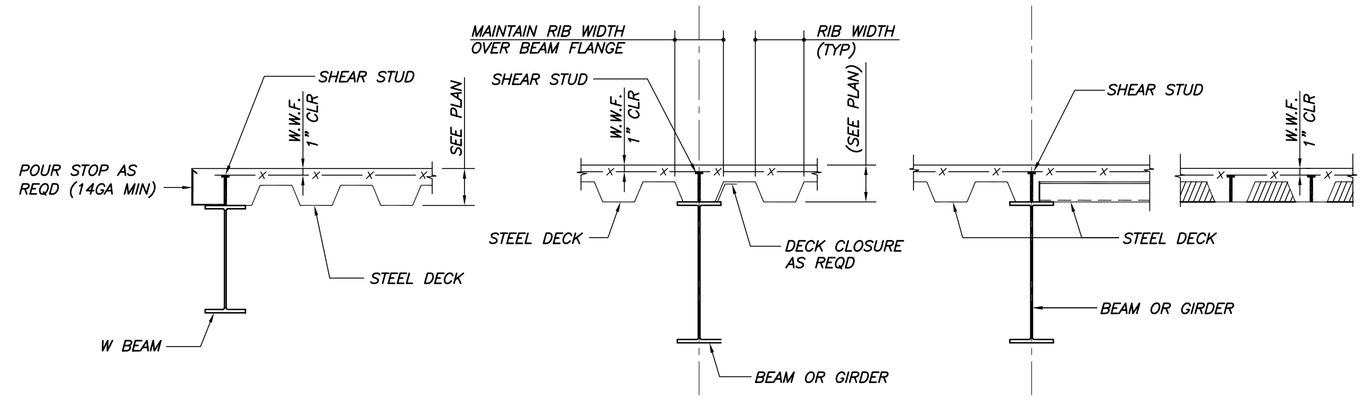

TYP COMPOSITE DECK DETAILS

N.T.S.

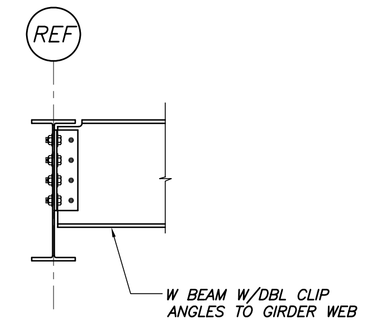

TYP BEAM/BEAM CONN DETAIL

N.T.S.

SIMPLE SHEAR BEAM CONN. SCHEDULE			
BEAM SIZE	DESIGN REACTION	MINIMUM NO BOLTS 1 SIDED CONNECTION	MINIMUM NO BOLTS 2 SIDED CONNECTION
W8,W10	10k	2	2
W12,W14	15k	3	2
W16	25k	4	3
W18	40k	5	3
W24	60k	6	4
W27	70k	8	6

SIMPLE SHEAR CONNECTIONS NOTES:

1. SIMPLE SHEAR CONNECTIONS SHALL BE SELECTED FROM THE AISC "MANUAL OF STEEL CONSTRUCTION – ALLOWABLE STRESS DESIGN, NINTH EDITION" USING THE ABOVE REFERENCED REACTIONS AND CRITERIA. REACTIONS INDICATED ARE UNFACTORED. MORE BOLTS THAN REFERENCED IN THE "MINIMUM" SECTIONS ABOVE MAY BE REQUIRED FOR LOAD REQUIREMENTS.
2. CONNECTIONS ARE SUBJECT TO REVIEW ON THE STEEL SHOP DRAWINGS.
3. ALL BOLTS SHALL BE A325 OR A490 FOR SIMPLE SHEAR CONNECTIONS, MIN 3/4"ø. MINIMUM WELD SIZE SHALL BE 5/16". MINIMUM MATERIAL SIZE FOR PLATES OR ANGLES SHALL BE 3/8"
4. ONE SIDED CONNECTIONS INCLUDE SINGLE PLATES AND SINGLE ANGLE CONNECTIONS.
5. TWO SIDED CONNECTIONS INCLUDE DOUBLE ANGLE AND END PLATE CONNECTIONS.

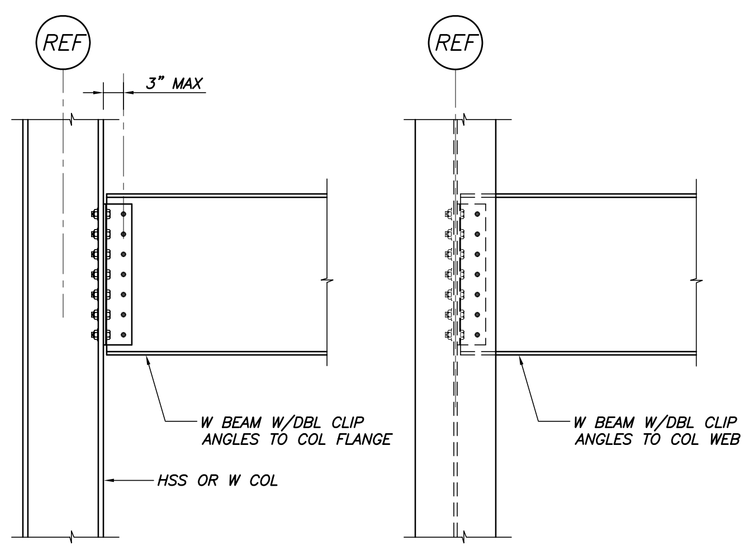

TYP BEAM/COL CONN DETAILS @ NEW COLUMN

N.T.S.

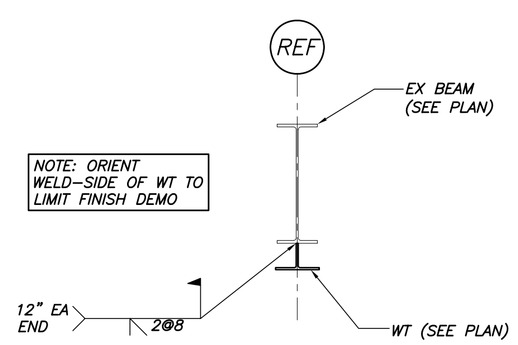

TYP BEAM REINF DETAIL

N.T.S.

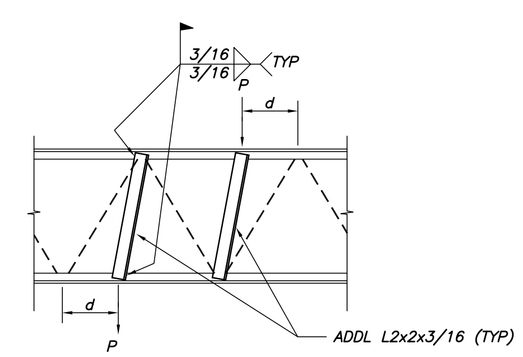

TYP JOIST REINF DETAIL

N.T.S.

1. FOR CONCENTRATED LOADS LOCATED A DISTANCE "d", 4" OR MORE FROM PANEL POINT, PROVIDE ADDITIONAL WEB MEMBERS AS SHOWN.
2. P = 300# MAX LOAD.

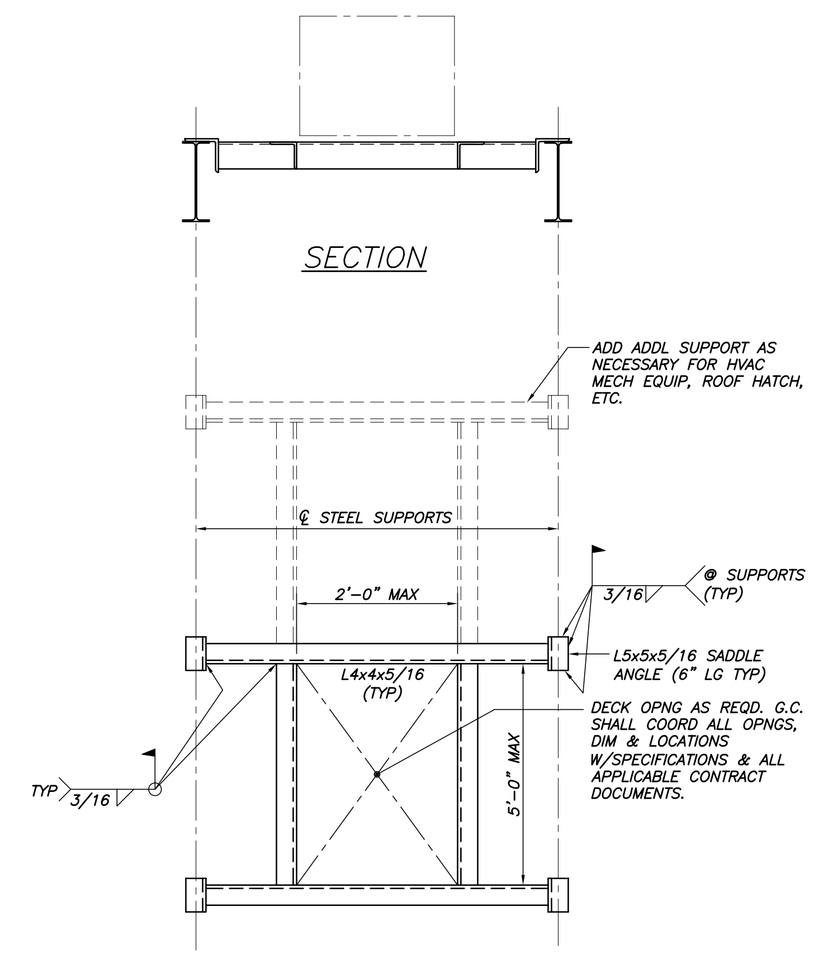

PLAN OF TYP OPENING IN ROOF DECK

N.T.S.

TYPICAL @ FANS & OTHER MECH & HVAC EQUIP U.N.O.

STATE OF MAINE
PAUL B. BECKER
NO. 6554
LICENSED
PROFESSIONAL ENGINEER

City of Portland
PUBLIC SAFETY BUILDING
Crime Lab Project

Architect
Winton Scott Architects
Portland, Maine

Structural Engineering
Becker Structural Engineers
Portland, Maine

Mechanical Engineering
Mechanical Systems Engineers
Yarmouth, Maine

Electrical Engineering
Bartlett Design
Bath, Maine

TYPICAL FRAMING DETAILS

S1.5

Scale: AS NOTED | June 13 , 2008