PARKING SPACES

9 - 8'-9"x18'-0"
7 - 8'-6"x18'-0"
7 - 8'-3"x18'-0"
2 - 8'-0"x15'-0" COMPACT SPACES
2 - 8'-0"x18'-0" ACCESSIBLE SPACE W/ ACCESS AISLE

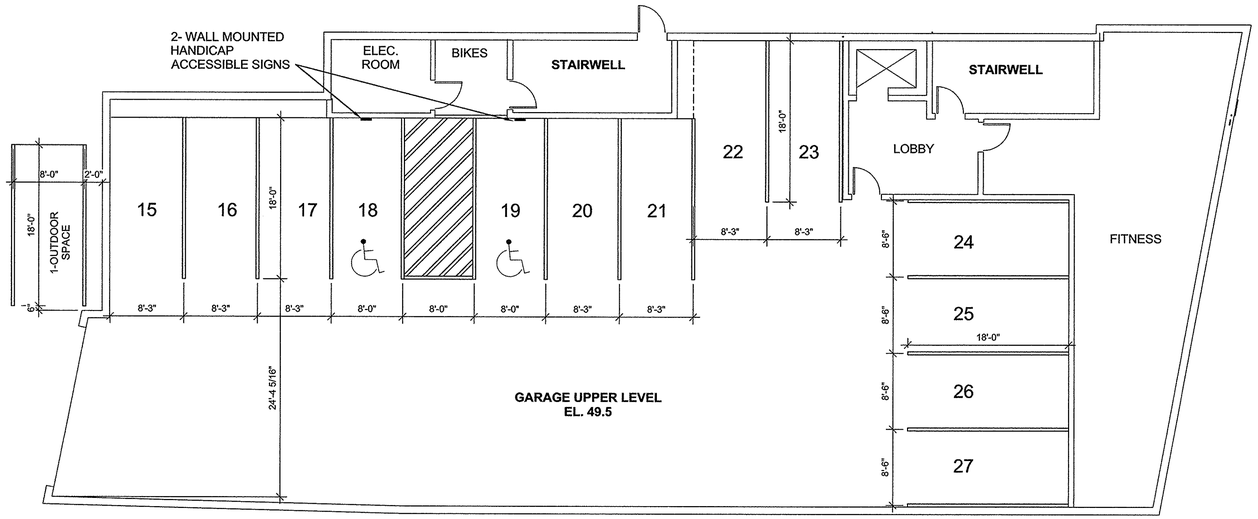

1st FLOOR PARKING–FEDERAL STREET ENTRANCE

SCALE: 1/8" = 1'-0"

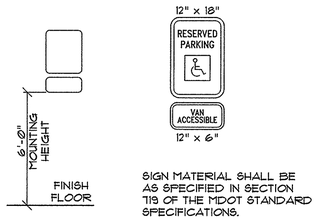

SIGN MATERIAL SHALL BE AS SPECIFIED IN SECTION 719 OF THE MDOT STANDARD SPECIFICATIONS.

1 WALL SIGN DETAILS

NOT TO SCALE

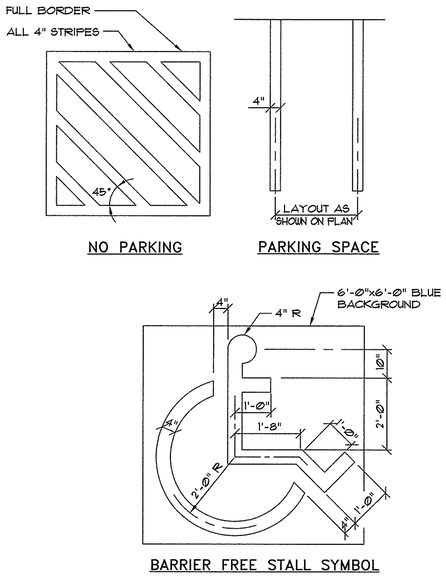

NO PARKING

PARKING SPACE

BARRIER FREE STALL SYMBOL

2 STRIPING DETAILS

NOT TO SCALE

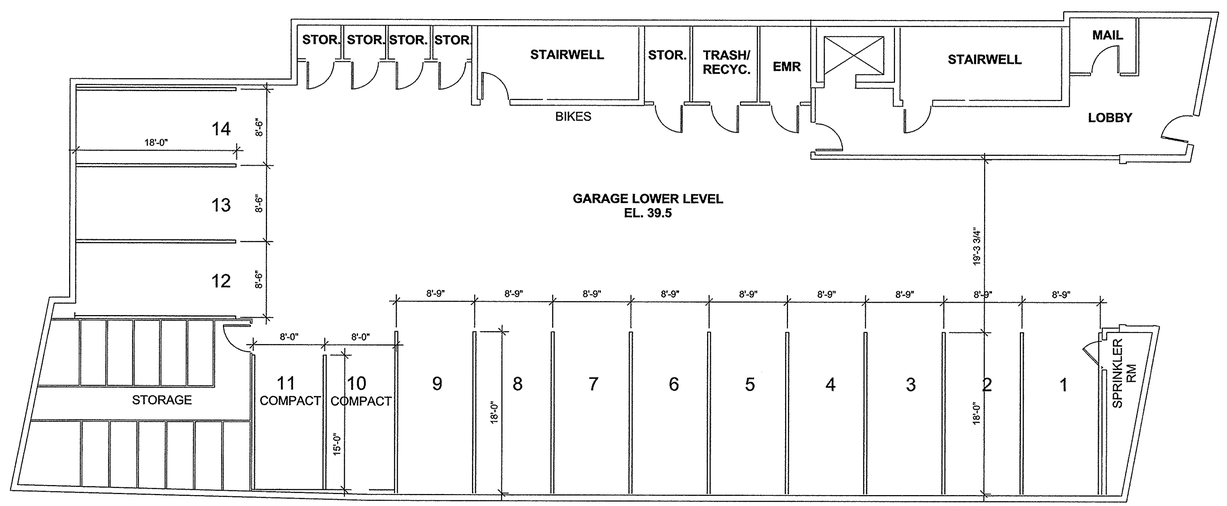

BASEMENT PARKING–NEWBURY STREET ENTRANCE

SCALE: 1/8" = 1'-0"

PINKHAM & GREER CIVIL ENGINEERS
28 VANNAH AVE. PORTLAND, ME. 04103
TEL: 207.781.5242 FAX: 207.781.4245

STATE OF MAINE THOMAS S. GREER No. 4206 LICENSED PROFESSIONAL ENGINEER

1/25/16

REV.	DATE	DESCRIPTION

LUMINATO CONDOMINIUM, LLC
118 CONGRESS STREET, UNIT 401
PORTLAND, MAINE

SCALE: AS SHOWN
DATE: JANUARY 22, 2016
PROJECT: 15178
DRN BY: JDC
DESG BY: TSG
CHK BY: TSG

LUMINATO CONDOMINIUMS
169 NEWBURY STREET, PORTLAND, MAINE

PARKING LAYOUT & DETAILS

C1.7

MAP/LOT 28 / 1 / 4, 6, 9 & 10