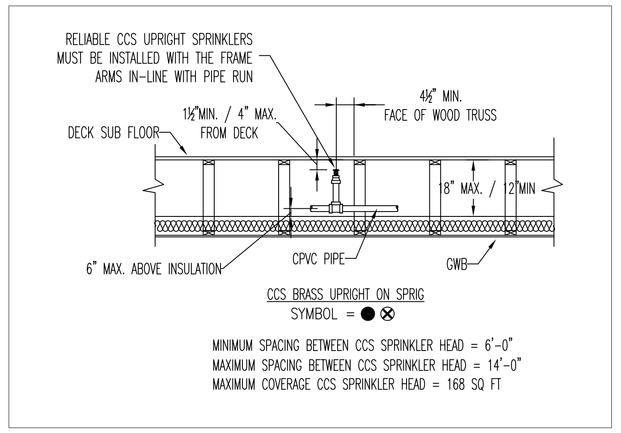

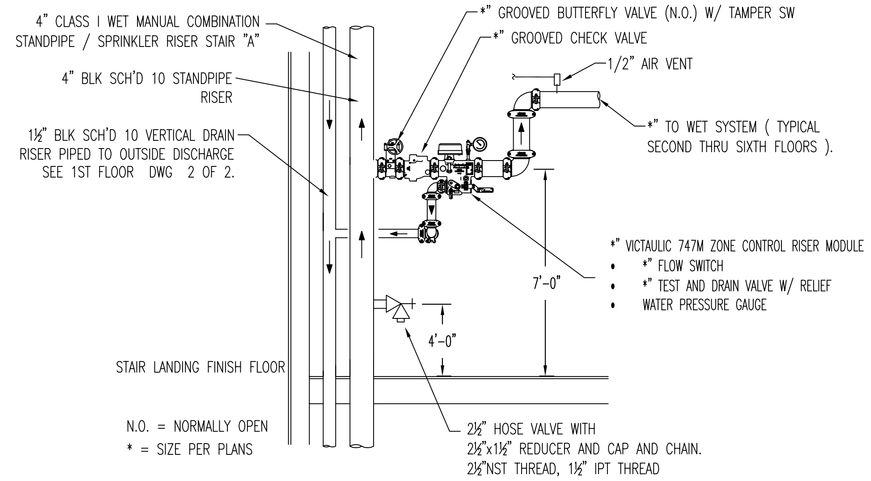

STAIR"A" FLOOR CONTROL VALVE ASSEMBLY DETAIL (FCVA)

N.T.S.

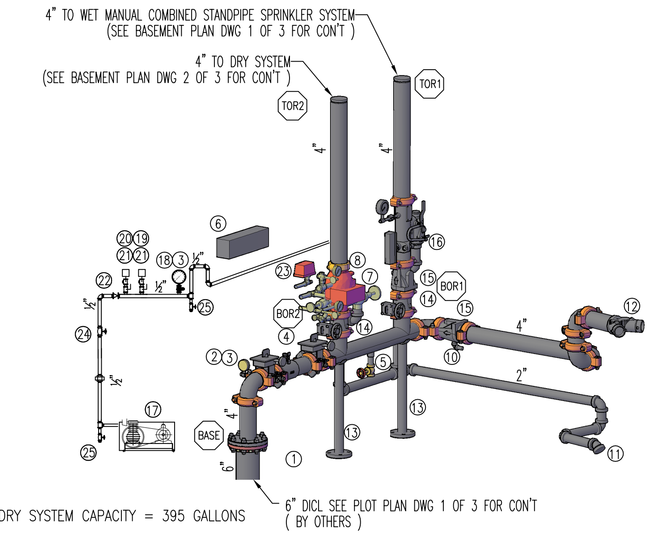

SPRINKLER SYSTEM RISER DETAIL "B"

NOT TO SCALE

LEGEND

1. 6" IPS BY OTHERS (SEE PLOT PLAN DWG 1 OF 1 FOR CON'T).
2. WATER PRESSURE GAUGE (0-300 PSI).
3. 1/4" 3-WAY VALVE.
4. 4" AMES M200-BFG BACKFLOW PREVENTER GRVD BUTTERFLY VALVES (N.O.) W/TAMPER SWITCHES.
5. 1" AUX. DRAIN.
6. HEAD BOX 12 SPARE HEADS AND HEAD WRENCH.
7. 2" MAIN DRAIN VALVE.
8. 4" TYCO MODEL DPV-1 DRY PIPE VALVE GxG WITH TRIM.
9. DELETED
10. ½" AUTOMATIC BALL DRIP VALVE.
11. 2" MAIN DRAIN DISCHARGE (SEE FIRST FLOOR PLAN DWG 1 OF 3).
12. 4" x 2½" x 2½" DEPT CONNECTION (SEE FIRST FLOOR PLAN DWG 1 OF 3).
13. 2" PIPE STAND.
14. 4" TYCO GROOVED BUTTERFLY VALVE WITH TAMPER SWITCH BFV-N (N.O.).
15. 4" TYCO GROOVED CHECK VALVE CV-1F.
16. 4" VICTAULIC 747M ZONE CONTROL RISER MODULE WITH 2" TEST AND DRAIN VALVE 1/2" ORIFICE RELIEF VALVE, VANE TYPE FLOW SWITCH, AND WATER GAUGE.
17. "GENERAL" BASE-MOUNTED AIR COMPRESSOR MODEL L425100A 1 HP, 115/230V SINGLE PHASE.
18. AIR PRESSURE GAUGE.
19. POTTER PS-40 LOW AIR PRESSURE SWITCH.
20. FURNAS AIR COMPRESSOR AUTOMATIC ON-OFF SWITCH (MOD.69WA4B)
21. 1/2" BLEEDER VALVE (N.O.).
22. 1/2" LOAD GENIE UNLOADER CHECK VALVE.
23. POTTER PS-10 PRESSURE SWITCH.
24. 1/2" BALL VALVE (N.O.)
25. 1/2" DRIP LEG W/VALVE (N.C.).

N.O. = NORMALLY OPEN
N.C. = NORMALLY CLOSED

GENERAL NOTES

SPRINKLER SYSTEM INSTALLATION TO COMPLY WITH NFPA 13 (2016) NFPA 14 (2003).

SCOPE OF WORK:
INSTALL (1) NEW DRY SPRINKLER SYSTEM THROUGHOUT THE BASEMENT AND FIRST FLOOR PARKING LEVELS. INSTALL (1) NEW CLASS I WET MANUAL COMBINATION STANDPIPE / SPRINKLER SYSTEM THROUGHOUT THE SECOND, THIRD, FOURTH, FIFTH, SIXTH, ROOF TERRACE FLOORS. E.F.P. TO BEGIN WORK AT 6" FLANGED OUTLET 12" A.F.F. INSIDE THE BUILDING.

OCCUPANCY HAZARD AND CLASSIFICATION:
LIGHT HAZARD = LOBBY, CORRIDORS, STAIRS, DWELLING UNITS, CONCEALED COMBUSTIBLE SPACES.

ORDINARY HAZARD GROUP I = SPRINKLER/MECH, ELECTRICAL ROOM, STORAGE, AND PARKING GARAGE.

ALTHOUGH NOT SPECIFIED, SOME SPRINKLER HEADS HAVE BEEN SHOWN @ CENTERLINE OF TILE. ACTUAL ORIENTATION OF HEADS WITH RESPECT TO CEILING COMPONENTS WILL VARY ACCORDING TO FIELD CONDITIONS.

ACOUSTICAL CEILING TILE (ACT) TO BE LISTED NON-COMBUSTIBLE WITH UL FLAME SPREAD OF LESS THAN 25.

ALL DIMENSIONS ARE SHOWN FOR GENERAL LOCATION OF SPRINKLER HEADS ; PIPING MAY VARY TO SUIT ACTUAL FIELD CONDITIONS.

STORAGE OF MATERIAL SHALL NOT EXCEED 8'-0" IN HEIGHT.

ALL WIRING TO BE DONE BY OTHERS.

ALL PAINTING BY OTHERS.

⬡ INDICATES HYDRAULIC REFERENCE POINTS.
FF ℄ INDICATES FINISH FLOOR UP TO CENTERLINE OF PIPE.
DD ℄ INDICATES DECK DOWN TO CENTERLINE OF PIPE.
BJ ℄ INDICATES BOTTOM OF JOIST DOWN TO CENTERLINE OF PIPE.

AS PER NFPA 13, 2016 PAR. 8.16.2.3.1 DRY SYSTEM
BRANCH LINE PIPING SHALL BE PITCHED AT LEAST 1/2" PER 10'-0"
MAIN PIPING SHALL BE PITCHED AT LEAST 1/4" PER 10'-0"

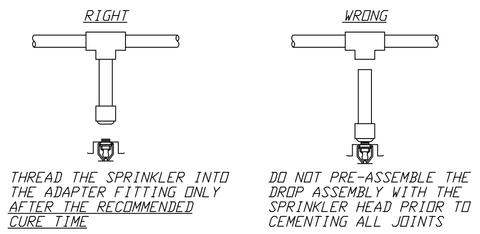

DO NOT USE ANY THREAD SEALANT

CPVC TORQUESAFE SPRINKLER HEAD INSTALLATION DETAIL

NOT TO SCALE

1. HAND INSTALL UNTIL SNUG
2. WITH WRENCH ON SPRINKLER HEAD ROTATE HEAD CLOCKWISE UNTIL FRAME IS PROPERLY ALIGNED. BRASS INSERT AND HEAD WILL ROTATE TOGETHER
3. NEVER REVERSE OR BACKUP THREADED ASSEMBLY.

NOTE: BACKUP WRENCH MAY BE APPLIED TO BRASS INSERT FLATS ONLY FOR REMOVAL OF SPRINKLER HEAD.

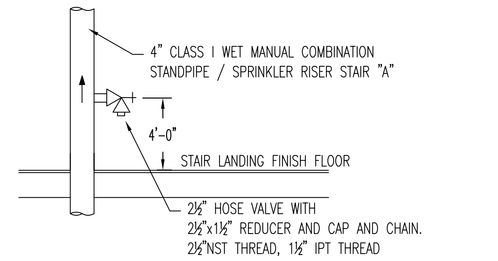

HOSE VALVE DETAIL "HV"

N.T.S.

CURE TIMES WITH ONE STEP SOLVENT CEMENT 200 psi (MAXIMUM) TEST PRESSURE			
PIPE SIZE inches	Ambient Temperature During Cure Period		
	60°F to 120°F	40°F to 59°F	0°F to 39°F
3/4"	45 min.	1.5 hr.	24 hr.
1"	45 min.	1.5 hr.	24 hr.
1-1/4"	1.5 hr.	16 hr.	120 hr.
1-1/2"	1.5 hr.	16 hr.	120 hr.
2"	6 hr.	36 hr.	See Note 1
2-1/2"	8 hr.	72 hr.	See Note 1
3"	8 hr.	72 hr.	See Note 1

Note 1 For these sizes, the solvent cement can be applied at temperatures below 40°F, however, the sprinkler system temperature must be raised to a temperature of 40°F or above and allowed to cure per the above recommendations prior to pressure testing.

USE SPEARS BLUE 75 PIPE JOINT COMPOUND OR TEFLON TAPE ON ALL STEEL OR BRASS PIPE THREADS.

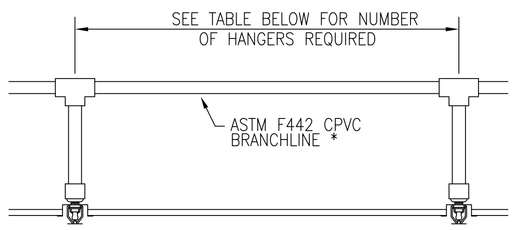

MINIMUM ALLOWABLE HANGERS PER LENGTH OF PIPE			
PIPE SIZE	PIPE LENGTH		
	1 HANGER	2 HANGERS	3 HANGERS
3/4"	0'-0" TO 5'-6"	5'-7" TO 11'-0"	11'-1" TO 16'-6"
1"	0'-0" TO 6'-0"	6'-1" TO 12'-0"	12'-1" TO 18'-0"
1 1/4"	0'-0" TO 6'-6"	6'-7" TO 13'-0"	13'-1" TO 19'-6"
1 1/2"	0'-0" TO 7'-0"	7'-1" TO 14'-0"	14'-1" TO 21'-0"
2"	0'-0" TO 8'-0"	8'-1" TO 16'-0"	16'-1" TO 24'-0"
2 1/2"	0'-0" TO 9'-0"	9'-1" TO 18'-0"	18'-1" TO 27'-0"
3"	0'-0" TO 10'-0"	10'-1" TO 20'-0"	20'-1" TO 30'-0"

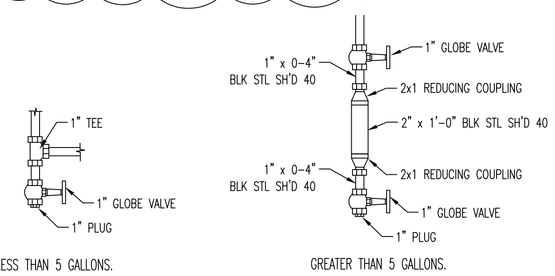

DRY SYSTEM AUXILARY DRAIN DETAIL

NOT TO SCALE

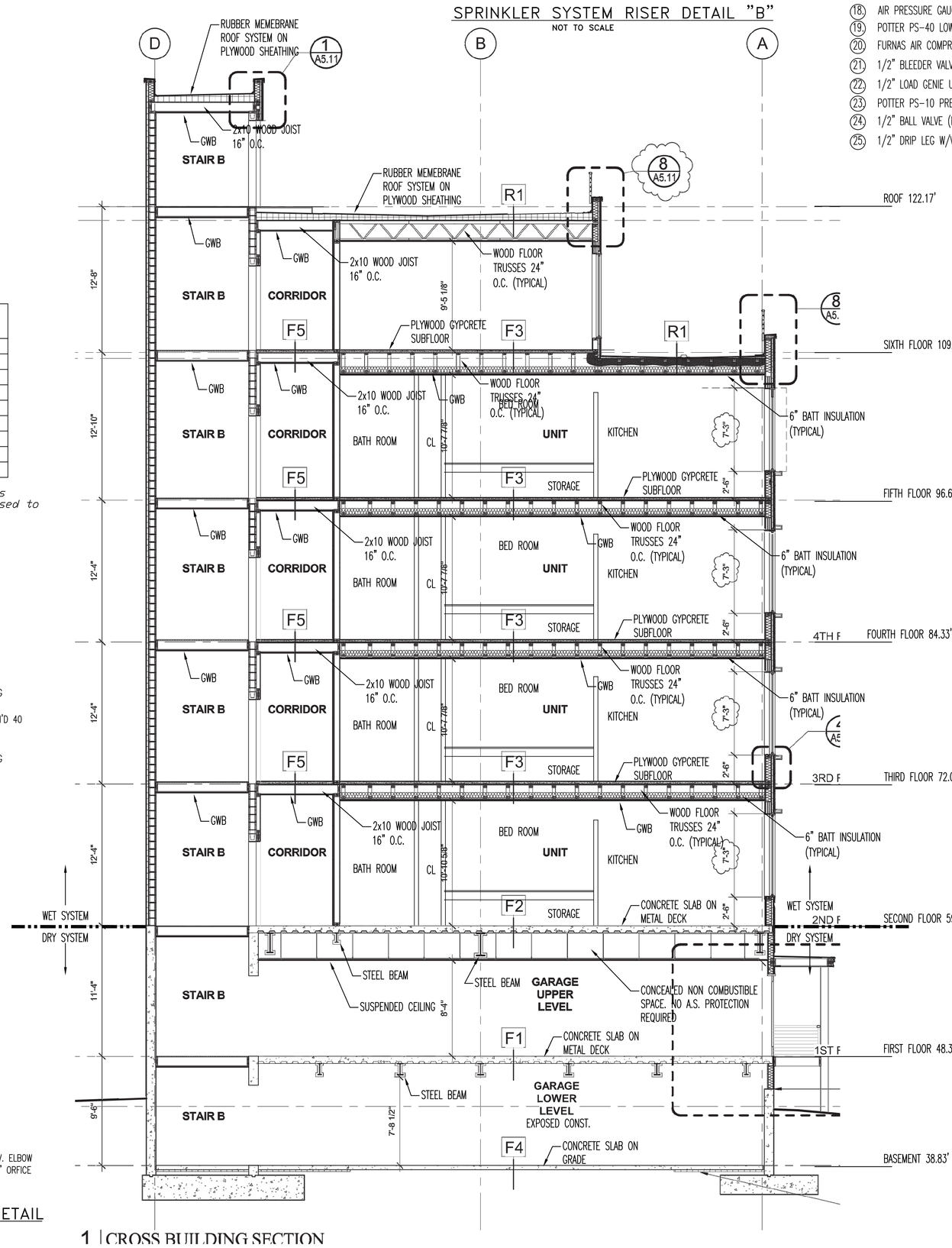

1 CROSS BUILDING SECTION

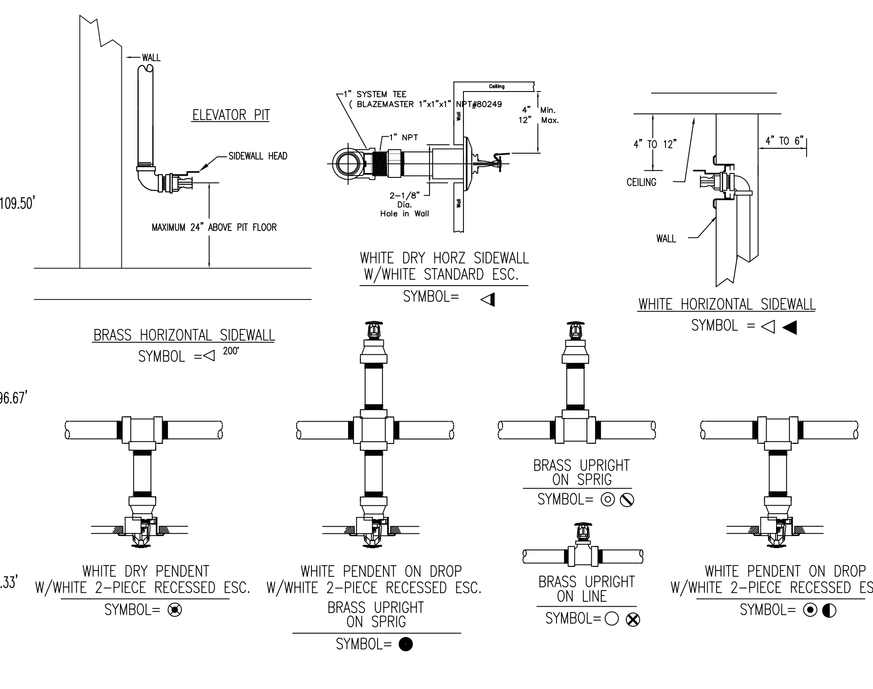

SPRINKLER HEAD DETAILS

NOT TO SCALE

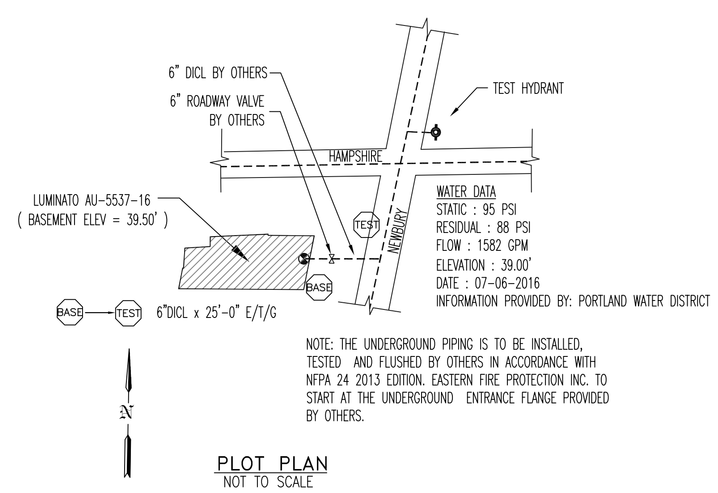

PLOT PLAN

NOT TO SCALE

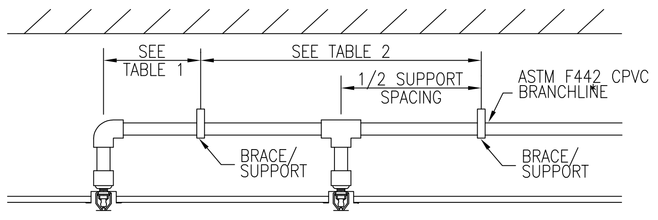

TABLE 1 MAXIMUM SUPPORT SPACING DISTANCE END LINE SPRINKLER HEAD DROP ELBOW		
PIPE SIZE	SYSTEM PRESSURE	
	< 100 psi	> 100 psi
3/4"	9"	6"
1"	12"	9"
1 1/4"	16"	12"
1 1/2" – 3"	24"	12"

TABLE 2 MAXIMUM SUPPORT SPACING DISTANCE INLINE SPRINKLER HEAD TEE		
PIPE SIZE	SYSTEM PRESSURE	
	< 100 psi	> 100 psi
3/4"	4'	3'
1"	5'	4'
1 1/4"	6'	5'
1 1/2" – 3"	7'	7'

CPVC HANGER INSTALLATION DETAIL

NOT TO SCALE

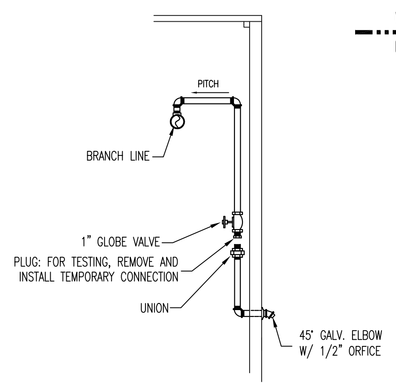

DRY INSPECTOR'S TEST DETAIL

NOT TO SCALE

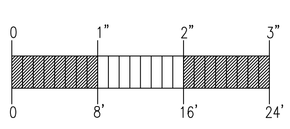

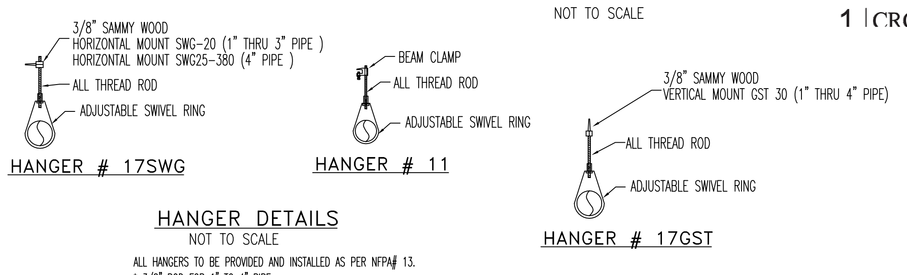

HANGER DETAILS

NOT TO SCALE

ALL HANGERS TO BE PROVIDED AND INSTALLED AS PER NFPA 13.
* 3/8" ROD FOR 1" TO 4" PIPE
* 1/2" ROD FOR 5" TO 8" PIPE

GENERAL NOTES	DATE	REVISIONS	REQUIRED APPROVALS	LUMINATO CONDOMINIUMS 167 NEWBURY ST, PORTLAND, MAINE	FIRE SPRINKLER PLANS & DETAILS
SPRINKLER SYSTEM INSTALLATION TO COMPLY WITH NFPA13 (2016) AND NFPA14 (2013).			OWNER / ARCHITECT		DWG. NO. 1 OF 3
DRY SYSTEM AND EXPOSED WET SYSTEM BRANCH LINE PIPING TO BE BLACK STEEL SCHEDULE 40 JOINED BY THREADED DUCTILE IRON FITTINGS.			STATE FIRE MARSHAL		
DRY SYSTEM AND STANDPIPE MAIN PIPING TO BE BLACK STEEL SCHEDULE 10 WITH GROOVED ENDS & WELDED OUTLETS JOINED BY MECHANICAL CPLGS.			PORTLAND FIRE DEPARTMENT		
2ND THRU 6TH FLOORS CONCEALED WET SYSTEM 1" THRU 2" PIPING TO BE CPVC PLASTIC PIPE JOINED WITH CPVC GLUE FITTINGS.			DRAWN BY GRD NICET LEVEL III CERT.# 090388	CONTRACT WITH: LANDRY / FRENCH CONSTRUCTION CO.	JOB NUMBER AU-5537-16
OWNER TO PROVIDE SUFFICIENT HEAT THROUGHOUT BUILDING TO PREVENT FREEZING OF WATER FILLED SPRINKLER PIPING & EQUIPMENT (MIN 40° F) EXCEPT FOR BASEMENT AND FIRST FLOOR PARKING LEVELS.			CHECKED BY JWD NICET LEVEL III CERT.# 116803	EASTERN FIRE PROTECTION AUBURN/LEWISTON INDUSTRIAL AIRPARK, AUBURN, MAINE 04210	SCALE AS NOTED
			CONTRACTOR LICENSE # 101		DATE 12-15-16
			CONTRACTOR RMS # 839		